OPERATOR'S MANUAL

MODEL #100892
4500W OPEN FRAME INVERTER

REGISTER YOUR PRODUCT ONLINE

at **championpowerequipment.com**

TAKE IT OUTSIDE™

TAKEYOURGENERATOROUTSIDE.COM

1·877·338·0999

or visit **championpowerequipment.com**

SAVE THESE INSTRUCTIONS. This manual contains important safety precautions which should be read and understood before operating the product. Failure to do so could result in serious injury. This manual should remain with the product.

Specifications, descriptions and illustrations in this manual are as accurate as known at the time of publication, but are subject to change without notice.

REV 20210617

Champion Power Equipment, Inc., Santa Fe Springs, CA USA

TAKE IT OUTSIDE™

CARBON MONOXIDE KILLS

CARBON MONOXIDE SAFETY: THE BIG PICTURE

As the only safe way to use a portable generator, taking your generator outside is absolutely mandatory to keep your family safe from carbon monoxide. But there's even more you can do. By educating yourself about all carbon monoxide risks, you'll be better prepared to protect your family from this colorless, oderless threat.

ALWAYS READ THE OPERATOR'S MANUAL FIRST

KNOW THE SYMPTOMS

- Headache
- Nausea
- Shortness of breath
- Dizziness
- Fatigue

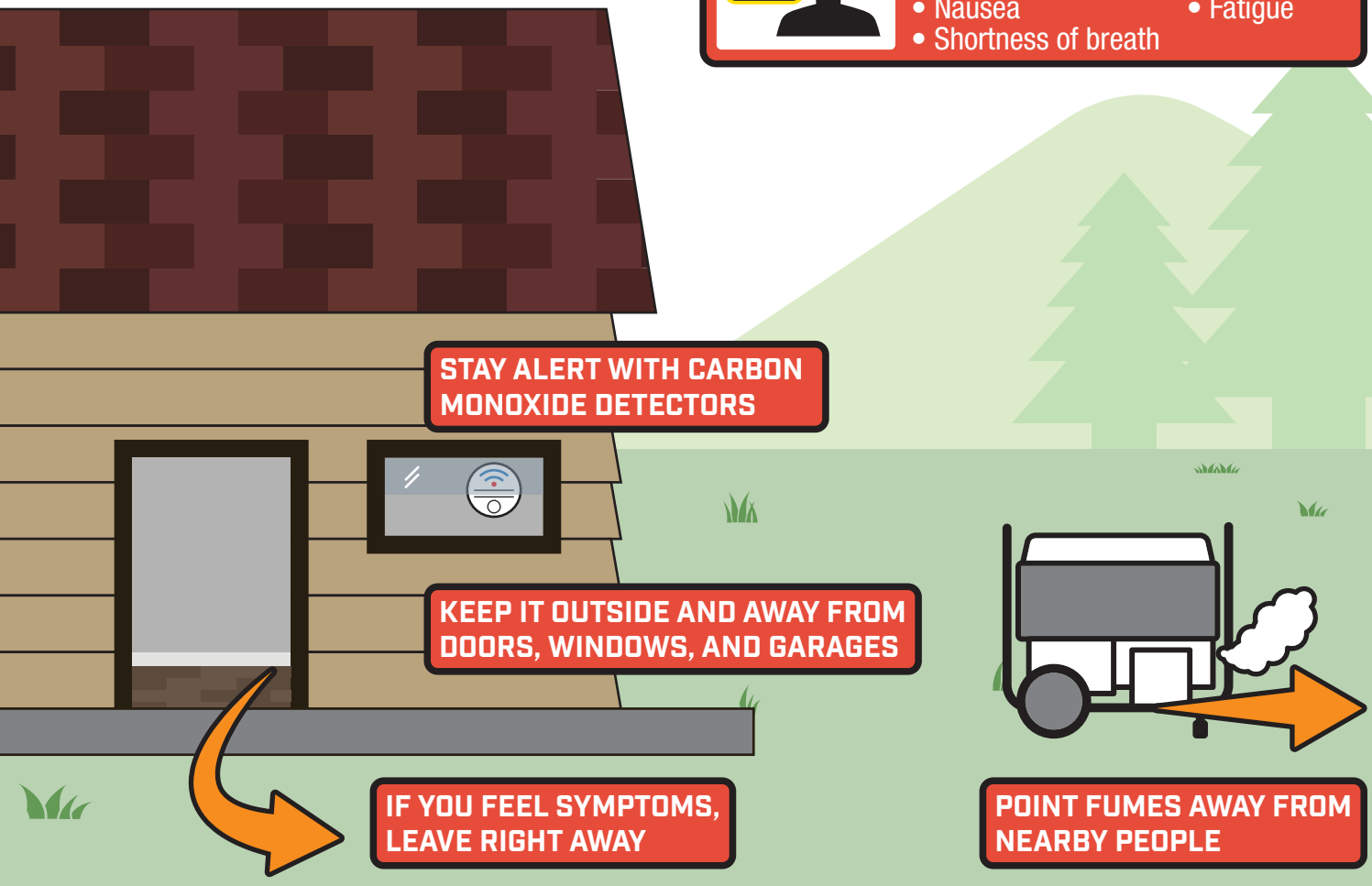

www.TakeYourGeneratorOutside.com

TABLE OF CONTENTS

Introduction **4**

Safety Definitions **4**

Important Safety Instructions **5**

Fuel Safety 7
Safety and Dataplate Labels 8
Safety Symbols 9
Operation Symbols 10
Quickstart Label Symbols 11

Controls and Features **12**

Generator 12
Control Panel 13
Intelligauge 14
FCC Statement 15
Parts Included 15

Assembly **16**

Unpacking 16
Remove Shipping Support Spacers 16
Add Engine Oil 16
Add Fuel 17
Grounding 18

Operation **18**

Generator Location 18
Surge Protection 19
Starting the Engine 19
Connecting Electrical Loads 20
Do Not Overload Generator 20
Eco (Economy) Mode 20
12V DC Automotive Style Outlet 21
Parallel Operation 21
Stopping the Engine 21
Moving the Generator 22
Operation at High Altitude 22

Maintenance **22**

Cleaning the Generator 23
Changing the Engine Oil 23
Cleaning and Adjusting the Spark Plug 23
Cleaning the Air Filter 24
Cleaning the Spark Arrestor 24
Adjusting the Governor 24
Maintenance Schedule 24

Storage **25**

Short Term Storage (up to 30 days) 25
Mid Term Storage (30 days – 1 year) 25
Long Term Storage (over 1 year) 25
Removing from Storage 26

Specifications **27**

Generator Specifications 27
Engine Specifications 27
Oil Specifications 27
Fuel Specifications 27
Temperature Specifications 27
Parts Diagram 28
Parts List 29
Engine Parts Diagram 31
Engine Parts List 32
Wiring Diagram 34

Troubleshooting **35**

Warranty* **36**

Warranty Qualifications 36
Repair/Replacement Warranty 36
Do Not Return The Unit To The Place Of Purchase 36
Warranty Exclusions 36
Other Exclusions 36
Limits of Implied Warranty and Consequential Damage 36
Contact Information 36

INTRODUCTION

Congratulations on your purchase of a Champion Power Equipment (CPE) product. CPE designs, builds, and supports all of our products to strict specifications and guidelines. With proper product knowledge, safe use, and regular maintenance, this product should bring years of satisfying service.

Every effort has been made to ensure the accuracy and completeness of the information in this manual at the time of publication, and we reserve the right to change, alter and/or improve the product and this document at any time without prior notice.

CPE highly values how our products are designed, manufactured, operated, and serviced as well as providing safety to the operator and those around the generator. Therefore, it is IMPORTANT to review this product manual and other product materials thoroughly and be fully aware and knowledgeable of the assembly, operation, dangers and maintenance of the product before use. Fully familiarize yourself, and make sure others who plan on operating the product fully familiarize themselves too, with the proper safety and operation procedures before each use. Please always exercise common sense and always err on the side of caution when operating the product to ensure no accident, property damage, or injury occurs. We want you to continue to use and be satisfied with your CPE product for years to come.

When contacting CPE about parts and/or service, you will need to supply the complete model and serial numbers of your product. Transcribe the information found on your product's nameplate label to the table below

CPE TECHNICAL SUPPORT TEAM
1-877-338-0999
MODEL NUMBER
100892
SERIAL NUMBER
DATE OF PURCHASE
PURCHASE LOCATION

SAFETY DEFINITIONS

The purpose of safety symbols is to attract your attention to possible dangers. The safety symbols, and their explanations, deserve your careful attention and understanding. The safety warnings do not by themselves eliminate any danger. The instructions or warnings they give are not substitutes for proper accident prevention measures.

⚠ DANGER

DANGER indicates a hazardous situation which, if not avoided, will result in death or serious injury.

⚠ WARNING

WARNING indicates a hazardous situation which, if not avoided, could result in death or serious injury.

⚠ CAUTION

CAUTION indicates a hazardous situation which, if not avoided, could result in minor or moderate injury.

NOTICE

NOTICE indicates information considered important, but not hazard-related (e.g., messages relating to property damage).

IMPORTANT SAFETY INSTRUCTIONS

⚠ WARNING

Cancer and Reproductive Harm – www.P65Warnings.ca.gov

⚠ DANGER

Generator exhaust contains carbon monoxide, a colorless, odorless, poisonous gas. Breathing carbon monoxide will cause nausea, dizziness, fainting or death. If you start to feel dizzy or weak, get to fresh air immediately.

OPERATE GENERATOR OUTDOORS ONLY IN A WELL VENTILATED AREA AND POINT EXHAUST AWAY.

DO NOT operate the generator inside any building, including garages, basements, crawlspaces and sheds, enclosure or compartment, including the generator compartment of a recreational vehicle.

DO NOT allow exhaust fumes to enter a confined area through windows, doors, vents or other openings.

⚠ DANGER

Using a generator indoors **CAN KILL YOU IN MINUTES**. Generator exhaust contains carbon monoxide. This is a poison you cannot see or smell.

NEVER use inside a home or garage, **EVEN IF** doors and windows are open.

ONLY use **OUTSIDE** and far away from windows, doors, and vents.

Install battery-operated carbon monoxide alarms or plug-in carbon monoxide alarms with battery back-up according to the manufacturer's instructions.

⚠ WARNING

Although the generator contains a spark arrester, maintain a minimum distance of 5 ft. (1.5 m) from dry vegetation to prevent fires.

⚠ DANGER

Operate equipment with guards in place.

Rotating parts can entangle hands, feet, hair, clothing and/or accessories. Traumatic amputation or severe laceration can result.

Keep hands and feet away from rotating parts.

Tie up long hair and remove jewelry.

DO NOT wear loose-fitting clothing, dangling drawstrings or items that could become caught.

⚠ DANGER

Generator produces powerful voltage.

DO NOT touch bare wires or receptacles.

DO NOT use electrical cords that are worn, damaged or frayed. Use only Champion electrical cords for proper application.

DO NOT operate generator in wet weather.

DO NOT allow children or unqualified persons to operate or service the generator.

Use a ground fault circuit interrupter (GFCI) in damp areas and areas containing conductive material such as metal decking.

Connection to your home's electrical system requires a listed 30A transfer switch installed by a licensed electrician and approved by the local authority having jurisdiction. The connection must isolate the generator from the utility power and must comply with all applicable laws and electrical codes.

⚠ WARNING

Do not use generator for medical and life support uses.

In case of emergency, call 911 immediately.

NEVER use this product to power life support devices or life support appliances.

NEVER use this product to power medical devices or medical appliances.

Inform your electricity provider immediately if you or anyone in your household depends on electrical equipment to live.

Inform your electrical provider immediately if a loss of power would cause you or anyone in your household to experience a medical emergency.

⚠ WARNING

Spark from removed spark plug wire can result in fire or electrical shock.

When servicing the generator:

Disconnect the spark plug wire and place it where it cannot contact the plug or any other metal object.

DO NOT check for spark with the plug removed.

Use only approved spark plug testers.

⚠ WARNING

Running engines produce heat. Severe burns can occur on contact. Combustible material can catch fire on contact.

DO NOT touch hot surfaces.

Avoid contact with hot exhaust gases.

Allow equipment to cool before touching.

Maintain at least 3 ft. (91.4 cm) of clearance on all sides to ensure adequate cooling.

Maintain at least 5 ft. (1.5 m) of clearance from combustible materials.

⚠ WARNING

Rapid retraction of the recoil cord will pull hand and arm towards the engine faster than you can let go. Unintentional startup can result in entanglement, traumatic amputation or laceration. Broken bones, fractures, bruises or sprains could result.

When starting engine, pull the recoil cord slowly until resistance is felt and then pull rapidly to avoid kickback.

DO NOT start or stop the engine with electrical devices plugged in and turned on.

⚠ CAUTION

Exceeding the generator's running capacity can damage the generator and/or electrical devices connected to it.

DO NOT overload the generator.

DO NOT tamper with the governed speed.

DO NOT modify the generator in any way.

⚠ CAUTION

Start the generator and allow the engine to stabilize before connecting electrical loads.

Connect electrical equipment in the off position, and then turn them on for operation.

Turn electrical equipment off and disconnect before stopping the generator.

⚠ CAUTION

Improper treatment or use of the generator can damage it, shorten its life or void the warranty.

Use the generator only for intended uses.

Operate only on level surfaces.

DO NOT expose generator to excessive moisture, dust, or dirt.

DO NOT allow any material to block the cooling slots.

If connected devices overheat, turn them off and disconnect them from the generator.

DO NOT use the generator if:

- Electrical output is lost
- Equipment sparks, smokes or emits flames
- Equipment vibrates excessively

Fuel Safety

⚠ DANGER

GASOLINE AND GASOLINE VAPORS ARE HIGHLY FLAMMABLE AND EXPLOSIVE.

Fire or explosion can cause severe burns or death.

Gasoline and gasoline vapors:

- Gasoline is highly flammable and explosive.
- Gasoline can cause a fire or explosion if ignited.
- Gasoline is a liquid fuel but it's vapors can ignite.
- Gasoline is a skin irritant and needs to be cleaned up immediately if spilled on skin or clothes.
- Gasoline has a distinctive odor, this will help detect potential leaks quickly.
- Gasoline expands or contracts with ambient temperatures. Never fill the gasoline tank to full capacity, as gasoline needs room to expand when temperatures rise.
- In the case of any petroleum gasoline fire, flames should never be extinguished unless the fuel supply valve can be turned OFF. By not doing so, if a fire is extinguished and the supply of fuel is not turned OFF, an explosion hazard could be created.

When adding or removing gasoline:

- DO NOT light or smoke cigarettes.
- Always turn the generator off and let cool for a minimum of two minutes before removing the gasoline cap. Afterwards, loosen gasoline cap to relieve pressure from the gasoline tank.
- Only fill or drain gasoline outdoors in a well-ventilated area.
- DO NOT pump gasoline directly into the generator at the gas station. Always use an approved fuel container to transfer the gasoline to the generator.
- DO NOT overfill the gasoline tank.
- Always keep gasoline away from sparks, open flames, pilot lights, heat and other sources of ignition.

When starting the generator:

- DO NOT attempt to start a damaged generator.
- Always make certain that the gasoline cap, air filter, spark plug, fuel lines and exhaust system are properly secured, connected and in place.
- Always allow spilled gasoline to evaporate fully before attempting to start the engine.
- Make certain that the generator is resting firmly on level ground.

When operating the generator:

- DO NOT move or tip the generator during operation.
- DO NOT tip the generator or allow fuel or oil to spill.

When transporting or servicing the generator:

- Make certain that the fuel valve is in the OFF position and the gasoline tank is empty.
- Disconnect the spark plug wire.

When storing the generator:

- Store away from sparks, open flames, pilot lights, heat and other sources of ignition.
- Do not store generator or gasoline near furnaces, water heaters, or any other appliances that produce heat or have automatic ignitions.

⚠ WARNING

Never use a gasoline container, gasoline tank, or any other fuel item that is broken, cut, torn or damaged.

Safety and Dataplate Labels

These labels warn you of potential hazards that can cause serious injury. Read them carefully.

If a label comes off or becomes hard to read, contact Technical Support Team for possible replacement.

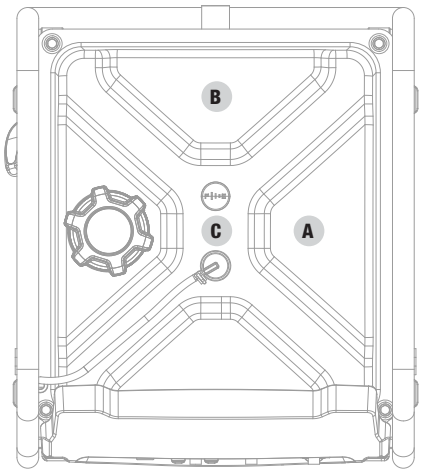

Top

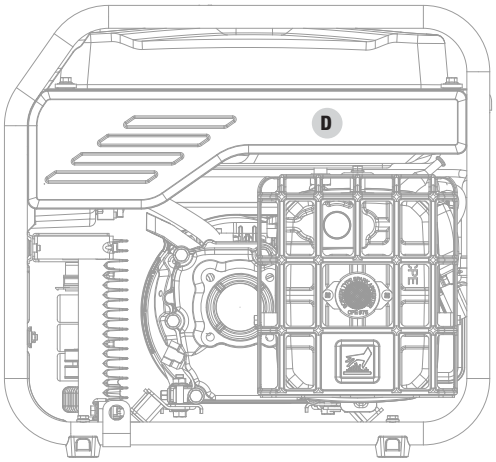

Side

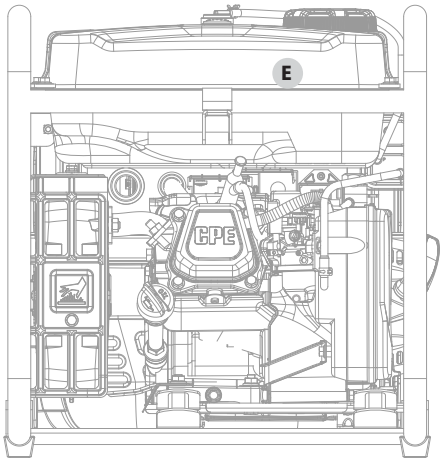

Back

	LABEL	DESCRIPTION
A	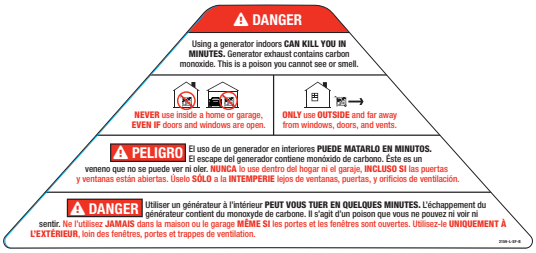	CO Danger
B		Safety Symbols
C	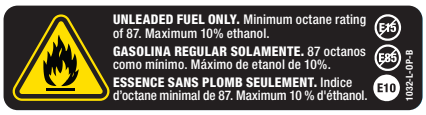	Fuel
D	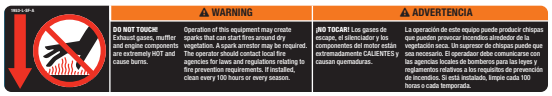	Hot Surface
E	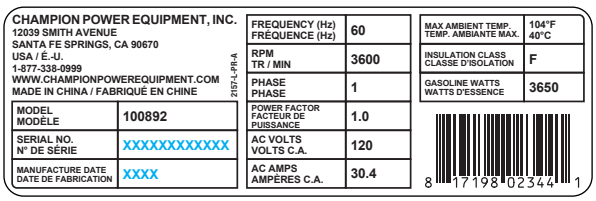 CHAMPION POWER EQUIPMENT, INC. 12039 SMITH AVENUE SANTA FE SPRINGS, CA 90670 USA / É.-U. 1-877-338-0999 WWW.CHAMPIONPOWEREQUIPMENT.COM MADE IN CHINA / FABRIQUÉ EN CHINE 2157-L-PR-A MODEL / MODÈLE: 100892 SERIAL NO. / N° DE SÉRIE: XXXXXXXXXXXX MANUFACTURE DATE / DATE DE FABRICATION: XXXX FREQUENCY (Hz) / FRÉQUENCE (Hz): 60 RPM / TR / MIN: 3600 PHASE / PHASE: 1 POWER FACTOR / FACTEUR DE PUISSANCE: 1.0 AC VOLTS / VOLTS C.A.: 120 AC AMPS / AMPÈRES C.A.: 30.4 MAX AMBIENT TEMP. / TEMP. AMBIANTE MAX.: 104°F / 40°C INSULATION CLASS / CLASSE D'ISOLATION: F GASOLINE WATTS / WATTS D'ESSENCE: 3650 8 17198 02344 1	Dataplate

Safety Symbols

Some of the following symbols may be used on this product. Please study them and learn their meaning. Proper interpretation of these symbols will allow you to more safely operate the product.

SYMBOL	MEANING
	Read Operator's Manual. To reduce the risk of injury, user must read and understand operator's manual before using this product.
	Clearance. Keep all objects at least 5 feet (1.5m) from generator. Heat from the muffler and exhaust gas can ignite combustible objects.
	Ground. Consult with local electrician to determine grounding requirements before operation.
	Electric Shock. Failure to use in dry conditions and to observe safe practices can result in electric shock. Improper connections to a building can allow current to backfeed into utility lines, creating an electrocution hazard. A transfer switch must be used when connecting to a building.
	Fire/Explosion. Fuel and its vapors are extremely flammable and explosive. Fire or explosion can cause severe burns or death. Keep generator at least 5 feet (1.5m) from all objects to prevent combustion.
	Hot Surface. To reduce the risk of injury or damage, avoid contact with any hot surface.
	Open Flame Alert. Fuel and its vapors are extremely flammable and explosive. Keep fuel away from smoking, open flames, sparks, pilot lights, heat, and other ignition sources.
	Wet Conditions Alert. Do not expose to rain or use in damp locations.

Operation Symbols

Some of the following symbols may be used on this product. Please study them and learn their meaning. Proper interpretation of these symbols will allow you to more safely operate the product.

SYMBOL	MEANING
	On
	Stop or Off
ECO	**Economy Mode Switch**
	Low Oil
	Overload Reset Switch
	Hertz
V	**Volts**
	Run time

SYMBOL	MEANING
	Choke. Pull choke knob to “CHOKE” position.
	Run. Push choke knob to “RUN” position.
12 V	**12V Direct Current**
	Parallel Connection(s)
	Circuit Breaker Reset: Push
	RV Ready Receptacle
N	**Neutral Floating.** Neutral circuit **IS NOT** electrically connected to the frame/ground of the generator.

Quickstart Label Symbols

Some of the following symbols may be used on this product. Please study them and learn their meaning. Proper interpretation of these symbols will allow you to more safely operate the product.

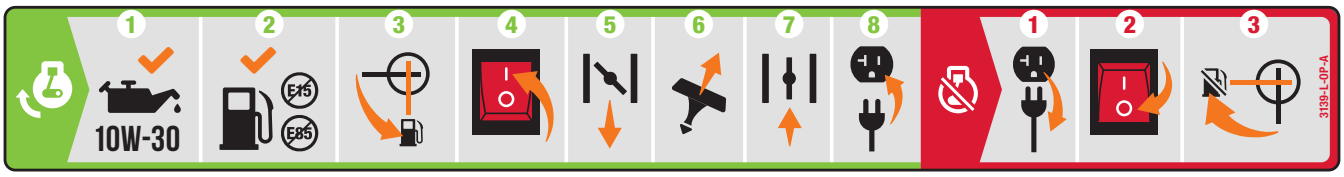

Starting the Engine

⚠ DANGER

Move generator outside and far away from windows, doors and intake ventilation covers.

1. **Check oil level.**
   Recommended oil is 10W-30.
2. **Check gasoline level.**
   When adding gasoline, use a minimum octane rating of 87 and an ethanol content of 10% or less by volume.
3. Turn the fuel valve to **"ON"** position.
4. Press engine switch to the **"ON"** position.
5. Pull choke knob to **"CHOKE"** position.
6. Pull the recoil cord.
7. Push the choke knob to **"RUN"** position.
8. Plug in desired device.

Stopping the Engine

1. Turn off and unplug all connected electrical loads.
2. Press the engine switch to the **"OFF"** position.
3. Turn the fuel valve to the **"OFF"** position.

CONTROLS AND FEATURES

Read this operator's manual before operating your generator. Familiarize yourself with the location and function of the controls and features. Save this manual for future reference.

Generator

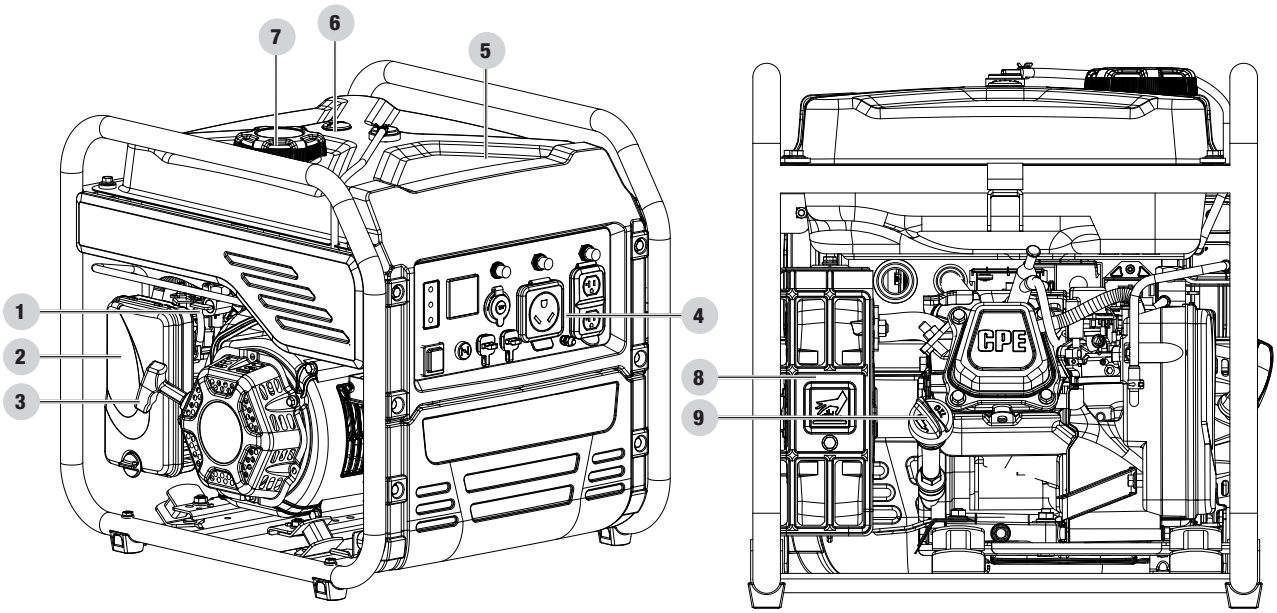

1. **Fuel Valve** – Used to turn fuel supply on and off to engine.
2. **Air Filter** – Protects the engine by filtering dust and debris from the intake air.
3. **Recoil Starter** – Used to manually start the engine.
4. **Control Panel** – See *Control Panel* section.
5. **Gasoline Tank** – 4 gal. (15.2 L)
6. **Gasoline Gauge**
7. **Fuel Cap** – Remove to add fuel.
8. **Muffler**
9. **Oil Fill Cap/Dipstick** – Used to check and fill oil level.

Control Panel

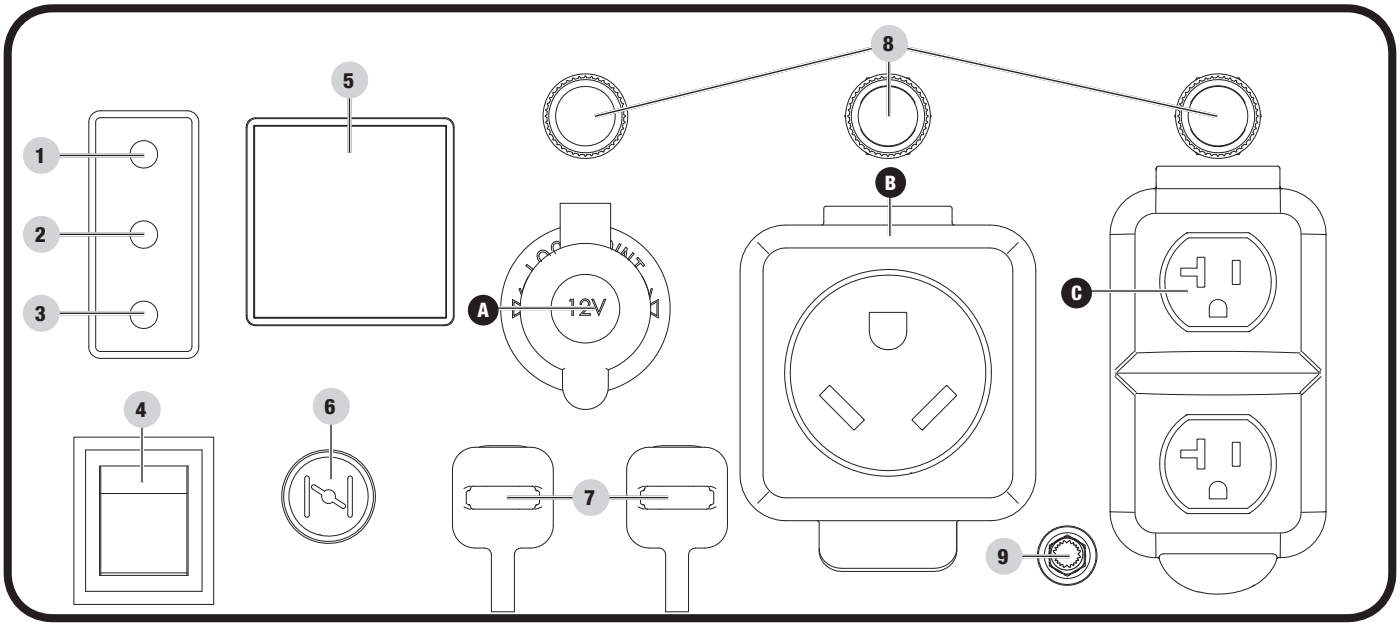

1. **Economy Mode Switch** – Enables/disables automatic idle control.
2. **Low Oil Warning Indicator Light** – When ON, engine will shut down and not run. Check oil level.
3. **AC Overload Reset Button** – Used to re-energize receptacles after overload fault.
4. **Engine Switch** – Used to put in START mode or STOP the generator.
5. **Intelligauge** – Three mode digital meter for displaying total run time, voltage and hertz.
6. **Choke** – Used to start a cold engine.
7. **Parallel Outlets** – Used to parallel two inverters together for increased power output. (parallel kit sold separately).
8. **Circuit Breakers (Push Reset)** – Protects the generator against electrical overloads.
9. **Ground Terminal** – Consult an electrician for local grounding regulations.

RECEPTACLES		
A	DC	**12V DC, 8A (Automotive)** May be used to supply electrical power for operation of 12 Volt DC, 8 Amp electrical loads.
B		**120V AC, 30A RV (NEMA TT-30R)** May be used to supply electrical power for operation of 120 Volt AC, 30 Amp, single phase, 60 Hz electrical loads.
C		**(2×) 120V AC, 20A (NEMA 5-20R)** May be used to supply electrical power for operation of 120 Volt AC, 20 Amp, single phase, 60 Hz electrical loads.

⚠ WARNING

Do not operate a device while it is plugged into the 12V DC outlet. Prolonged exposure to engine exhaust can cause serious injury or death. While charging a device do no place on the exhaust side of the generator. Extreme heat caused by exhaust can damage the device, and cause a potential fire hazard.

Intelligauge

Three mode digital meter for displaying frequency (hertz), voltage, and total run time.

The LCD displays each mode for several seconds and then automatically cycles through.

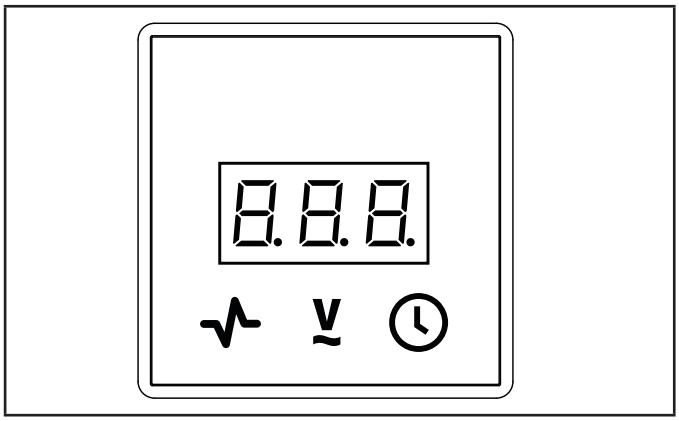

MODE	DESCRIPTION	
Frequency (H)	Output frequency in hertz.	
	Example: 60.0 hertz	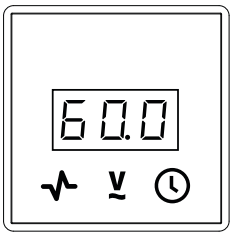
Voltage (V)	Output voltage of the generator.	
	Example: 120 volts	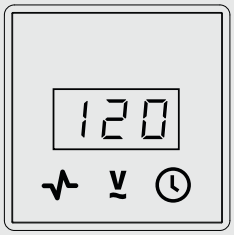
Total Run Time (Hrs.)	Total run time of the generator since first operation	
	Example: 16 hours	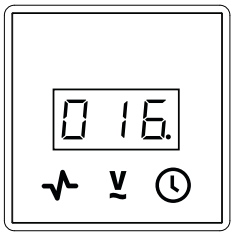

FCC Statement

1. This device complies with Part 15 of the FCC Rules. Operation is subject to the following two conditions:

   1a. This device may not cause harmful interference.

   1b. This device must accept any interference received, including interference that may cause undesired operation.

2. Changes or modifications not expressly approved by the party responsible for compliance could void the user's authority to operate the equipment.

⚠ NOTICE

This equipment has been tested and found to comply with the limits for a Class B digital device, pursuant to Part 15 of the FCC Rules. These limits are designed to provide reasonable protection against harmful interference in a residential installation. This equipment generates, uses and can radiate radio frequency energy and if not installed and used in accordance with the instructions, may cause harmful interference to radio communications. However, there is no guarantee that interference will not occur in a particular installation. If this equipment does cause harmful interference to radio or television reception, which can be determined by turning the equipment off and on, the user is encouraged to try to correct the interference by one or more of the following measures:

- Reorient or relocate the receiving antenna.
- Increase the separation between the equipment and receiver.
- Connect the equipment into an outlet on a circuit different from that to which the receiver is connected.

Consult dealer or an experienced radio/TV technician for help.

Parts Included

Accessories

Battery Charging Cables	1
Dual Port USB Adapter (5v/2.4A)	1
Engine Oil	20.3 fl. oz. (600 ml)
Oil Funnel	1

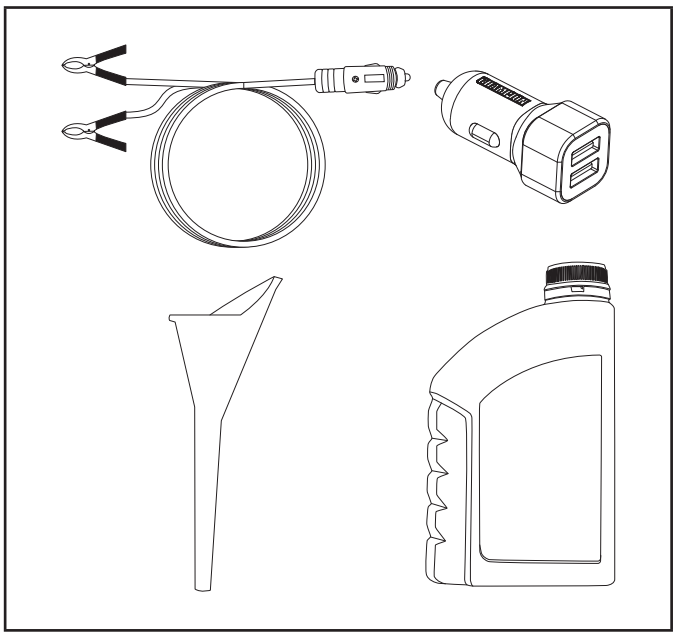

ASSEMBLY

Your generator requires some assembly. This unit ships from our factory without oil. It must be properly serviced with fuel and oil before operation.

If you have any questions regarding the assembly of your generator, call our Technical Support Team at 1-877-338-0999. Please have your serial number and model number available.

Unpacking

1. Set the shipping carton on a solid, flat surface.
2. Remove everything from the carton except the generator.
3. Carefully cut each corner of the box from top to bottom. Fold each side flat on the ground to provide a surface area to work with the generator.

Remove Shipping Support Spacers

To protect the generator during shipping, support spacers have been installed between the engine and frame. These spacers MUST BE REMOVED BEFORE adding oil or gasoline to the generator.

NOTICE

DO NOT attempt to run generator without first removing the shipping support spacers. Damage to the generator as a result of not removing the spacers will void the warranty.

1. **BEFORE** filling the engine with oil or gasoline, tip the generator onto its side as shown. Tip onto the flattened cardboard box the generator came in or other protective surface so as to not scratch the frame.
2. Remove the bolts from the orange support spacers and remove the spacers while lightly lifting the engine. Bolts and spacers can be discarded.

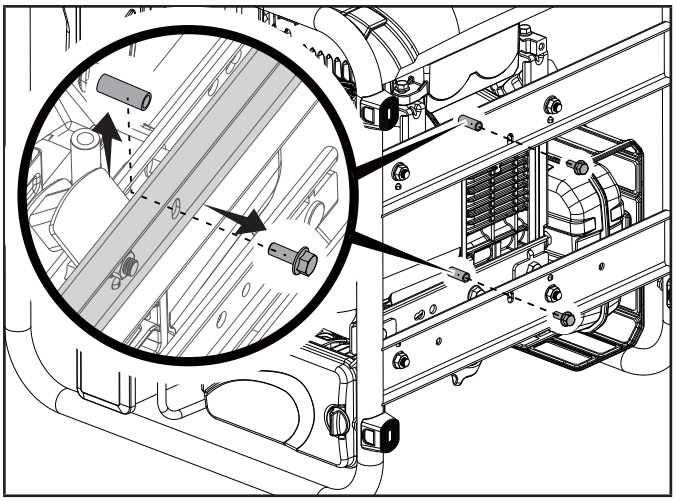

3. Tip the generator upright.

Add Engine Oil

CAUTION

DO NOT attempt to crank or start the engine before it has been properly filled with the recommended type and amount of oil. Damage to the generator as a result of failing to follow these instructions will void your warranty.

NOTICE

The generator rotor has a sealed, pre-lubricated ball bearing that requires no additional lubrication for the life of the bearing.

NOTICE

The recommended oil type for typical use is **10W-30 automotive oil**.

If running generator in extreme temperatures, refer to the following chart for recommended oil type.

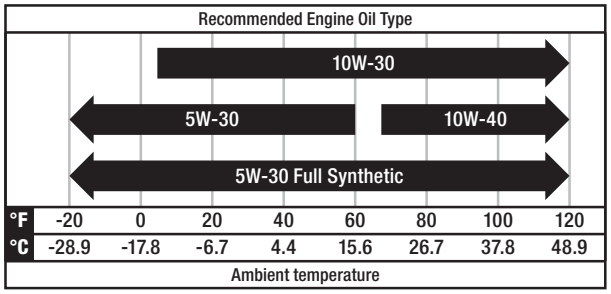

1. Place the generator on a flat, level surface.
2. Remove oil fill cap/dipstick to add oil.
3. Using a funnel, add up to 18.6 fl. oz. (550 ml) of oil (included) and replace oil fill cap/dipstick. DO NOT OVERFILL.

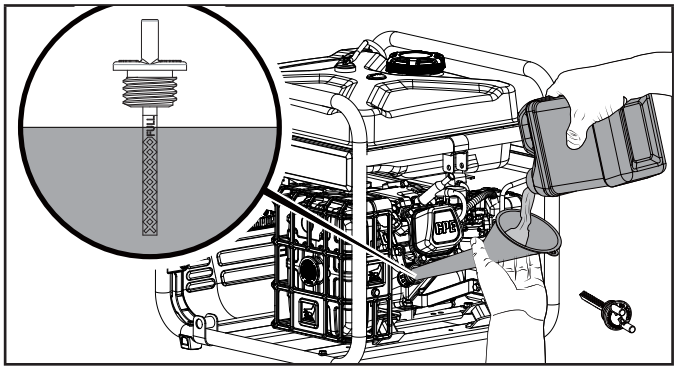

4. Check engine oil level at every use and add as needed.

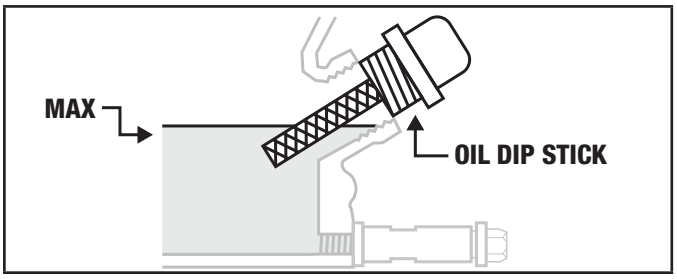

NOTICE

Once oil has been added, a visual check should show oil about 1-2 threads from running out of the fill hole.

When using the dipstick to check oil level, DO NOT screw in the dipstick while checking.

NOTICE

Check oil level often during the break-in period. Refer to the Maintenance section for recommended service intervals.

CAUTION

This engine is equipped with a low oil shut-off and will stop when the oil level in the crankcase falls below the threshold level.

NOTICE

The first 5 hours of run time are the break-in period for the unit. During the break in period stay at or below 50% of the running watt rating and vary the load occasionally to allow stator windings to heat and cool. Adjusting the load will also cause engine speed to vary slightly and help seat piston rings. After the 5 hour break-in period, change the oil.

NOTICE

Synthetic oil may be used after the 5 hour initial break-in period. Using synthetic oil does not decrease the recommended oil change interval. Full synthetic 5W-30 oil will aid in starting in cold ambient < 41° F (5° C) temperatures.

Add Fuel

Use clean, fresh, regular unleaded gasoline with a minimum octane rating of 87 and an ethanol content of 10% or less by volume. E10 E15 E85

DO NOT mix oil with gasoline.

1. Remove the gasoline cap.
2. Slowly add gasoline to the tank. Tank is full when gasoline reaches red circle on screen. DO NOT OVERFILL. Gasoline can expand after filling. A minimum of ¼ in. (6.4 mm) of space left in the tank is required for gasoline expansion, although more than ¼ in. (6.4 mm) is recommended. Gasoline can be forced out of the tank as a result of expansion if overfilled, and can affect the stable running condition of the generator. The approximate fuel level is shown on the fuel gauge on top of the fuel tank.

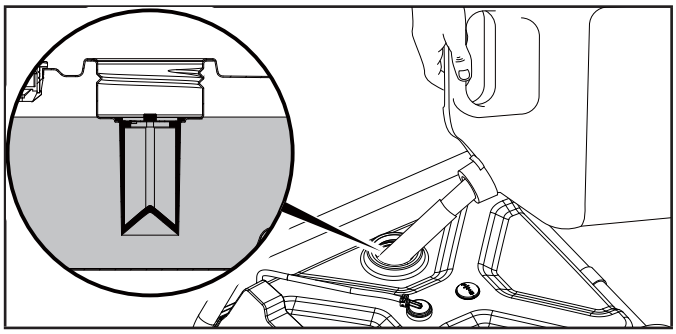

3. Screw on the gasoline cap and wipe away any spilled fuel.

CAUTION

Use unleaded gasoline with a minimum octane rating of 87 and an ethanol content of 10% or less by volume.

DO NOT light cigarettes or smoke when filling the tank.

DO NOT mix oil and gasoline.

DO NOT overfill the tank. Fill tank to approximately ¼ in. (6.4 mm) below the top of the tank to allow for gasoline expansion.

DO NOT pump gasoline directly into the generator at the pump. Use an approved fuel container to transfer the gasoline to the generator.

DO NOT fill tank indoors.

DO NOT fill tank when the engine is running or hot.

WARNING

Pouring gasoline too fast through the fuel screen may result in gasoline splashing over the generator and operator while filling.

NOTICE

The generator engine works well with 10% or less ethanol blend gasoline. When using ethanol-gasoline blends there are some issues worth noting:

- Ethanol-gasoline blends can absorb more water than gasoline alone.
- These blends can eventually separate, leaving water or a watery goo in the tank, fuel valve and carburetor. The compromised gasoline can be drawn into the carburetor and cause damage to the engine and/or potential hazards.
- If a fuel stabilizer is used, confirm that it is formulated to work with ethanol-gasoline blends.
- Any damages or hazards caused by using improper gasoline, improperly stored gasoline, and/or improperly formulated stabilizers, are not covered by manufacturer's warranty.

It is advisable to always shut off the gasoline supply and run the engine to starvation after each use. See Storage instructions for extended non-use.

Grounding

Your generator must be properly connected to an appropriate ground to help prevent electric shock.

WARNING

Failure to properly ground the generator can result in electric shock.

A ground terminal connected to the panel of the generator has been provided (see Controls and Features for terminal location). For remote grounding, connect of a length of heavy gauge (12 AWG minimum) copper wire between the generator ground terminal and a copper rod driven into the ground. We strongly recommend that you consult with a qualified electrician to ensure compliance with local electrical codes.

Neutral Floating*

- Neutral circuit **IS NOT** electrically connected to the frame/ground of the generator.
- The generator (stator winding) is isolated from the frame and from the AC receptacle ground pin.
- Electrical devices that require a grounded receptacle pin connection will not function if the receptacle ground pin is not functional.

Neutral Bonded to Frame*

- Neutral circuit **IS** electrically connected to the frame/ground of the generator.
- The generator system ground connects lower frame cross-member below the alternator. The system ground is connected to the AC neutral wire.

**See your Specifications section for specified type of grounding.*

OPERATION

Generator Location

NEVER operate the generator inside any building, including garages, basements, crawlspaces and sheds, enclosure or compartment, including the generator compartment of a recreational vehicle. Please consult your local authority. In some areas, generators must be registered with the local utility. Generators used at construction sites may be subject to additional rules and regulations. Generators should be on a flat, level surface at all times. (Even while not in operation) Generators must have at least 5 ft. (1.5 m) of clearance from all combustible material. In addition to clearance from all combustible material, generators must also have at least 3 ft. (91.4 cm) of clearance on all sides to allow for adequate cooling, maintenance and servicing. Generators should never be started or operated in the back of a SUV, camper, trailer, in the bed of a truck (regular, flat or otherwise), under staircases/stairwells, next to walls or buildings, or in any other location that will not allow for adequate cooling of the generator and/or the muffler. DO NOT contain generators during operation. Allow generators to properly cool before transport or storage.

Place the generator in a well-ventilated area. DO NOT place the generator near vents or intakes where exhaust fumes could be drawn into occupied or confined spaces. Carefully consider wind and air currents when positioning generator.

Failure to follow proper safety precautions may void manufacturer's warranty.

WARNING

Do not operate or store the generator in rain, snow, or wet weather.

Using a generator or electrical appliance in wet conditions, such as rain or snow, or near a pool or sprinkler system, or when your hands are wet, could result in electrocution.

WARNING

During operation the muffler and exhaust fumes will become hot. If adequate cooling and breathing space are not supplied, or if the generator is blocked or enclosed, temperatures can become extremely heated and may lead to fire.

Surge Protection

Electronic devices, including computers and many programmable appliances use components that are designed to operate within a narrow voltage range and may be affected by momentary voltage fluctuations. While there is no way to prevent voltage fluctuations, you can take steps to protect sensitive electronic equipment.

– Install UL1449, CSA-listed, plug-in surge suppressors on the outlets feeding your sensitive equipment.
  Surge suppressors come in single- or multi-outlet styles. They're designed to protect against virtually all short-duration voltage fluctuations.

Starting the Engine

1. Make certain the generator is on a flat, level surface.
2. Disconnect all electrical loads from the generator. Never start or stop the generator with electrical devices plugged in or turned on.
3. Turn the gasoline fuel valve to the "ON" position.

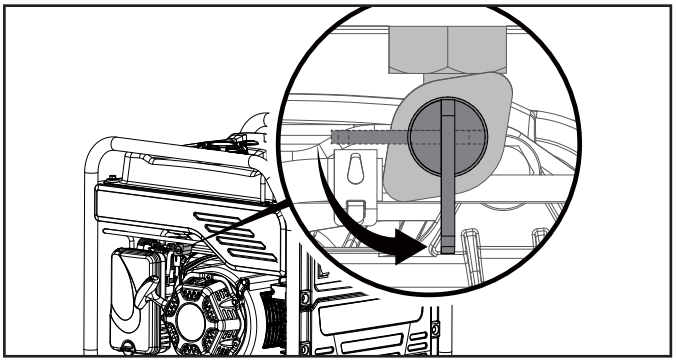

4. Push the engine switch to the "ON" position.

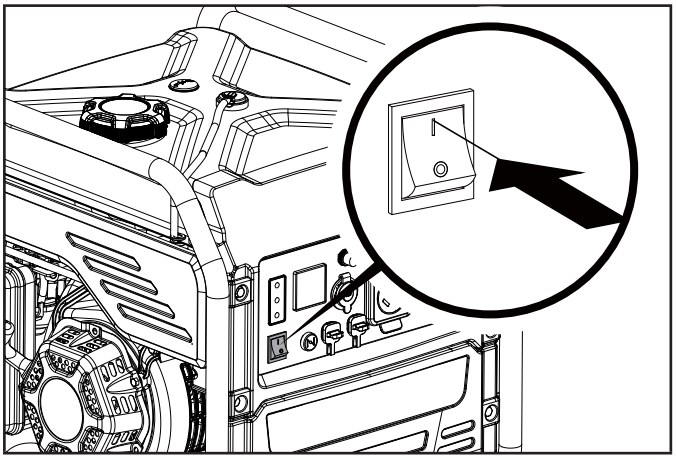

5. Pull choke knob out to the "CHOKE" position.

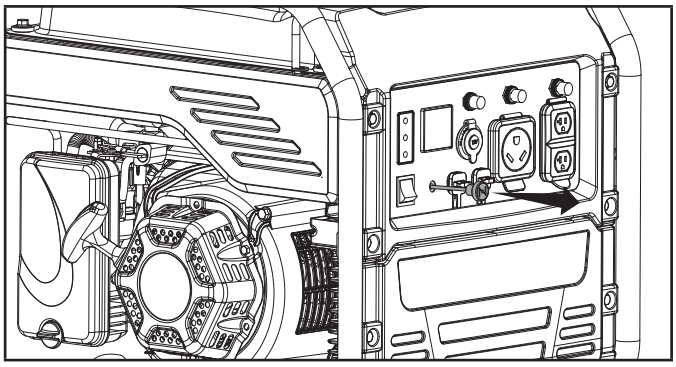

6. Pull the recoil cord slowly until resistance is felt and then pull rapidly.

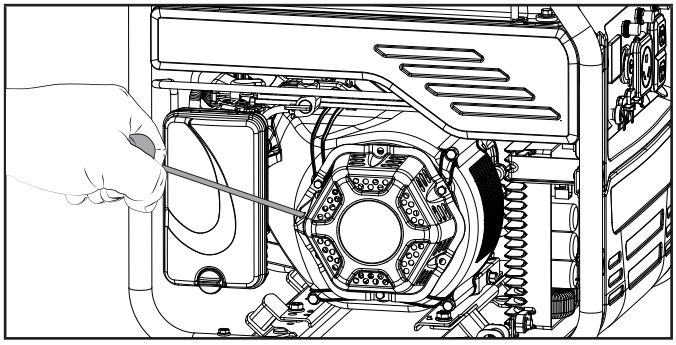

7. As engine warms up, push the choke knob in to the "RUN" position.

NOTICE

Keep choke in "CHOKE" position for only 1 pull of the recoil cord. After first pull, press the choke knob in to the "RUN" position for up to the next 3 pulls of the recoil cord. Too much choke leads to spark plug fouling/engine flooding due to the lack of incoming air. This will cause the engine not to start.

NOTICE

For gasoline restarts with hot engine in hot ambient > 86°F (30°C): Keep the choke in 75% of the "CHOKE" position for only 1 pull of the recoil cord. After first pull, push choke to the "RUN" position for up to 3 more pulls of the recoil cord. Too much choke leads to spark plug fouling/engine flooding due to the lack of incoming air. This will cause the engine not to start.

NOTICE

For gasoline starting in cold ambient < 59°F (15°C): The choke must be in 100% of the "CHOKE" position for manual start procedures. Do not over-choke. As soon as engine starts, push the choke knob in the "RUN" position.

NOTICE

If the engine starts but does not continue to run make certain that the generator is on a flat, level surface. The engine is equipped with a low oil sensor that will prevent the engine from running when the oil level falls below a critical threshold.

Connecting Electrical Loads

Let the engine stabilize and warm up for a few minutes after starting.

Plug in and turn on the desired 120 or 240 (if applicable) Volt AC single phase, 60 Hz electrical loads.

– DO NOT connect 3-phase loads to the generator.

– DO NOT overload the generator.

WARNING

Connecting a generator to your electric utility company's power lines or to another power source may be against the law. In addition this action, if done incorrectly, could damage your generator and appliances and could cause serious injury or even death to you or a utility worker who may be working on nearby power lines. If you plan to run a portable electric generator during an outage, please notify your electric utility company immediately and remember to plug your appliances directly into the generator. Do not plug the generator into any electric outlet in your home. Doing so could create a connection to the utility company power lines. You are responsible for ensuring that your generator's electricity does not feed back into the electric utility power lines.

If the generator will be connected to a building electrical system, consult your local utility company or a qualified electrician. Connections must isolate generator power from utility power and must comply with all applicable laws and codes.

Do Not Overload Generator

Capacity

Follow these simple steps to calculate the running and starting watts necessary for your purposes:

1. Select the electrical devices you plan on running at the same time.
2. Total the running watts of these items. This is the amount of power you need to keep your items running.
3. Identify the highest starting wattage of all devices identified in step 1. Add this number to the number calculated in step 2. Starting wattage is the surge of power needed to start some electric driven equipment. Following the steps listed under "Power Management" will guarantee that only one device will be starting at a time.

Power Management

Use the following formula to convert voltage and amperage to watts:

Volts × Amps = Watts

To prolong the life of your generator and attached devices, follow these steps to add electrical load:

1. Start the generator with no electrical load attached.
2. Allow the engine to run for several minutes to get up to temperature.
3. Plug in and turn on the first item. It is best to attach the item with the largest load first.
4. Allow the engine to stabilize.
5. Plug in and turn on the next item.
6. Allow the engine to stabilize.
7. Repeat steps 5-6 for each additional item.

NOTICE

Never exceed the specified capacity when adding loads to the generator.

Eco (Economy) Mode

The Eco Mode switch can be activated to turn on economy control in order to minimize fuel consumption and noise while operating the unit during times of reduced electrical output. Eco Mode allows the engine speed to idle during periods of non-use.

The engine speed returns to normal when an electrical load is connected. When the economy switch is off, the engine runs at normal speed continuously.

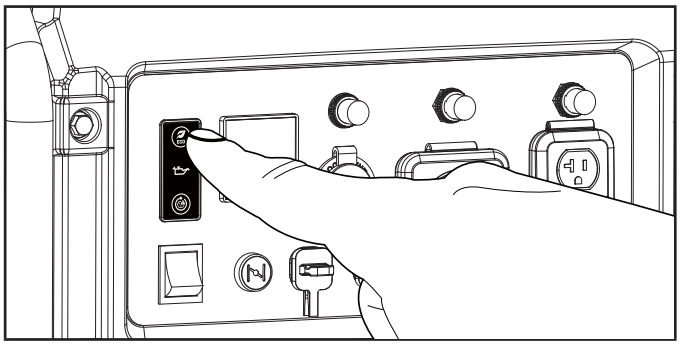

CAUTION

For periods of high electrical load or momentary fluctuations, the Eco Mode should be off.

12V DC Automotive Style Outlet

The 12V DC outlet(s) can be used with supplied accessories. The DC output is unregulated and can damage some products. Confirm the input voltage range of your item is at least 12-24V DC. When using the DC outlet turn the Eco Mode switch to the "OFF" position.

⚠ WARNING

Do not operate a device while it is plugged in to the 12V DC outlet.

Prolonged exposure to engine exhaust can cause serious injury or death.

⚠ CAUTION

While charging a device do not place on the exhaust side of the generator. Extreme heat caused by exhaust can damage the device, and cause a potential fire hazard.

Battery Charging

1. Before connecting the battery charging cable (included) to a battery that is installed in a vehicle, disconnect the vehicle battery ground cable from the negative (–) battery terminal.
2. Plug the battery charging cable into the 12V DC receptacle of the generator.
3. Connect the red (+) battery charger lead to the red (+) battery terminal.
4. Connect the black (–) battery charger lead to the black (–) battery terminal.
5. Start the generator.

⚠ CAUTION

Do not start the vehicle while the battery charging cable is connected and the generator is running. It will not give the battery a boost of power. The vehicle or the generator may be damaged. Charge only vented wet lead acid batteries. Other types of batteries may burst, causing personal injury or damage.

NOTICE

Be sure all electric devices including the lines and plug connections are in good condition before connection to the generator.

Parallel Operation

The Champion model 100892 is parallel ready and can be operated in parallel with another Champion unit to increase the total available electrical power. A Champion model 100319 parallel kit (sold separately) is required for parallel operation. For a list of compatible models or to order a parallel kit, please call customer service at 1-877-338-0999 or visit www.championpowerequipment.com.

Detailed instructions for parallel kit installation and operation of the connected generators are provided in the parallel kit operator's manual.

Stopping the Engine

1. Turn off and unplug all electrical loads. Never start or stop the generator with electrical devices plugged in or turned on.
2. Let the generator run at no-load for several minutes to stabilize internal temperatures of the engine and generator.
3. Turn the fuel valve to the "OFF" position.

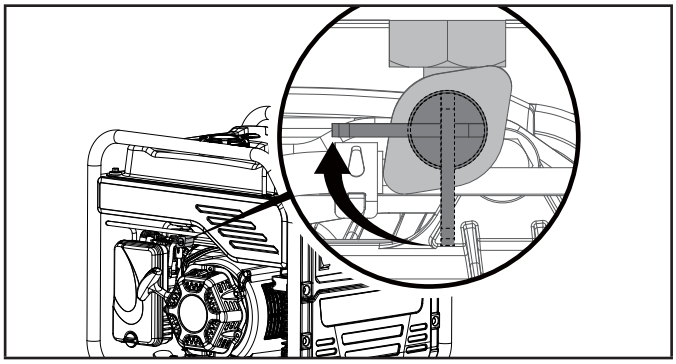

4. Let the engine run until fuel starvation has stopped the engine. This usually takes a few minutes.
5. Press the engine switch to the "OFF" position.

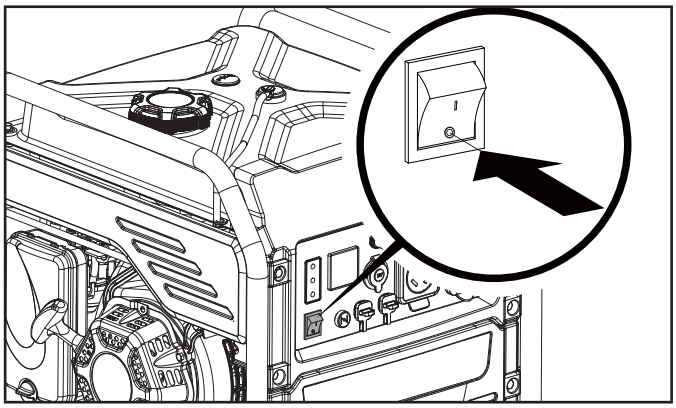

Important: Always ensure that the fuel valve and the engine switch are in the "OFF" position when the generator is not in use.

NOTICE

If the engine will not be used for a period of two (2) weeks or longer, please see the Storage section for proper engine and fuel storage.

Moving the Generator

- ALWAYS turn the generator off and ensure the fuel valve is closed.
- ALWAYS make sure engine and muffler are cooled down before the generator can be handled safely (typically 15-30 minutes).
- Lift unit up by the frame with 2 people and move to the desired location.
- Do not drop or strike unit or place under heavy objects.
- Failure to follow these instructions could result in personal injury or damage to the generator.

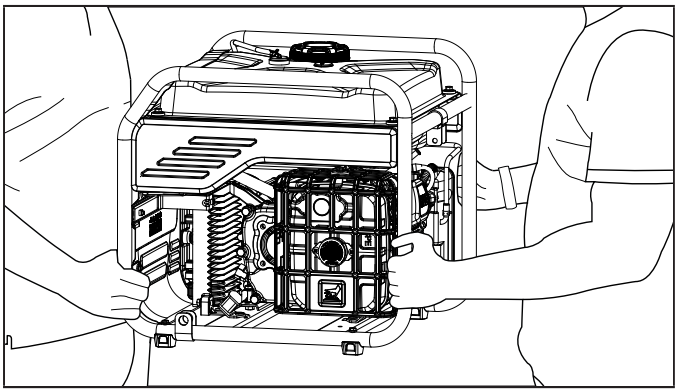

Operation at High Altitude

The density of air at high altitudes is lower than at sea level. Engine power is reduced as the air mass and air-fuel ratio decrease. Engine power and generator output will be reduced approximately 3½% for every 1000 ft. of elevation above sea level. At high altitudes increased exhaust emissions can also result due to the increased enrichment of the air fuel ratio. Other high altitude issues can include hard starting, increased fuel consumption and spark plug fouling.

To alleviate high altitude issues other than the natural power loss, CPE can provide a high altitude carburetor main jet. The alternative main jet and installation instructions can be obtained by contacting our Technical Support Team. Installation instructions are also available in the Technical Bulletin area of the CPE website.

The part number and recommended altitude range for the application of the high altitude carburetor main jet is listed in the following table.

In order to select the correct high altitude main jet it is necessary to identify the carburetor model. For this purpose, a code is stamped on the side of the carburetor. Select the correct high altitude jet part number corresponding to the carburetor code found on your particular carburetor.

Carb. Code	High Alt. Jet Part Number	Altitude Range
19694	100005757	3281-6562ft. (1000-2000m)
	100005766	6562-9843ft. (2000-3000m)

WARNING

Operation using the alternative main jet at elevations lower than the recommended minimum altitude can damage the engine. For operation at lower elevations, the originally supplied standard main jet must be used. Operating the engine with the wrong engine configuration at a given altitude may increase its emissions and decrease fuel efficiency and performance.

MAINTENANCE

Make certain that the generator is kept clean and stored properly. Only operate the unit on a flat, level surface in a clean, dry operating environment. DO NOT expose the unit to extreme conditions, excessive dust, dirt, moisture or corrosive vapors.

WARNING

Never operate a damaged or defective generator.

WARNING

Improper maintenance will void your warranty.

NOTICE

For Emission control devices and systems, read and understand your responsibilities for service as stated in the Emission Control Warranty Statement of this manual.

The owner/operator is responsible for all periodic maintenance.

Complete all scheduled maintenance in a timely manner.

Correct any issue before operating the generator.

For service or parts assistance, contact our Technical Support Team at 1-877-338-0999.

Cleaning the Generator

⚠ CAUTION

DO NOT spray generator directly with water.

Water can enter the generator through the cooling slots and damage the generator windings. It can also contaminate the fuel system.

1. Use a damp cloth to clean exterior surfaces of the generator.
2. Use a soft bristle brush to remove dirt and oil.
3. Use an air compressor (25 PSI) to clear dirt and debris from the generator.
4. Inspect all air vents and cooling slots to ensure that they are clean and unobstructed.

To prevent accidental starting, remove and ground the spark plug wire before performing any service.

Changing the Engine Oil

Change oil when the engine is warm. Refer to the oil specification to select the proper grade for your operating environment.

1. While holding the flat part of the drain tube with pliers or wrench, remove the oil drain bolt with a 10 mm socket or wrench.

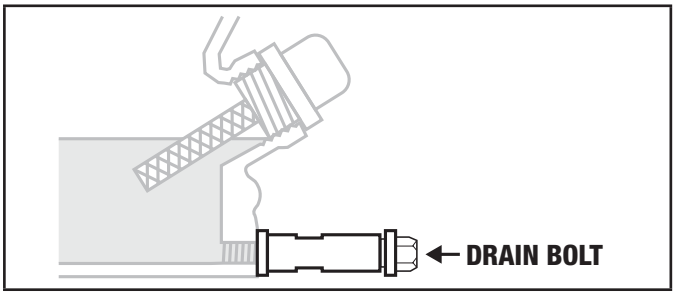

2. Allow the oil to drain completely into an appropriate container.

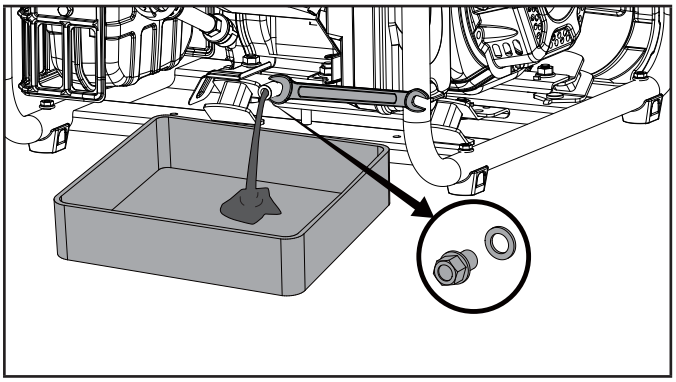

3. Replace the oil drain bolt.
4. Add oil according to *Add Engine Oil* in *Assembly* section. DO NOT OVERFILL. Oil not included for routine maintenance.
5. Dispose of used oil at an approved waste management facility.

NOTICE

Once oil has been added, a visual check should show oil about 1-2 threads from running out of the fill hole. If using the dipstick to check oil level, DO NOT screw in the dipstick while checking.

Cleaning and Adjusting the Spark Plug

1. Remove the spark plug cable from the spark plug.
2. Use a spark plug socket tool (not included), or a 13/16 in. (21 mm) socket (not included) to remove the plug.

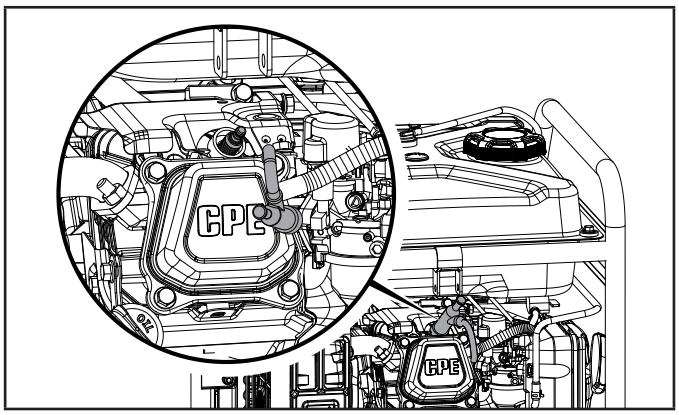

3. Inspect the electrode on the plug. It must be clean and not worn to produce the spark required for ignition.
4. Make certain the spark plug gap is 0.024 - 0.031 in. (0.6-0.8 mm).

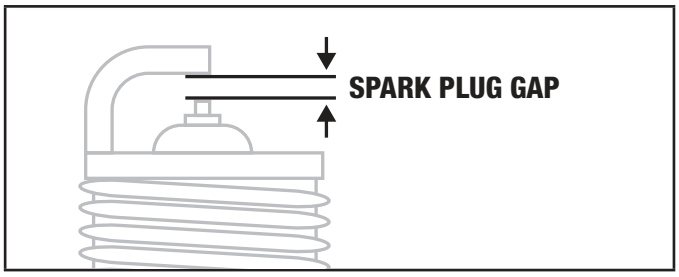

5. Refer to the spark plug types in Specifications when replacing the plug.
6. Firmly re-install the plug.
7. Attach the spark plug cable to the spark plug.

Cleaning the Air Filter

1. Remove the cover holding the air filter to the assembly.

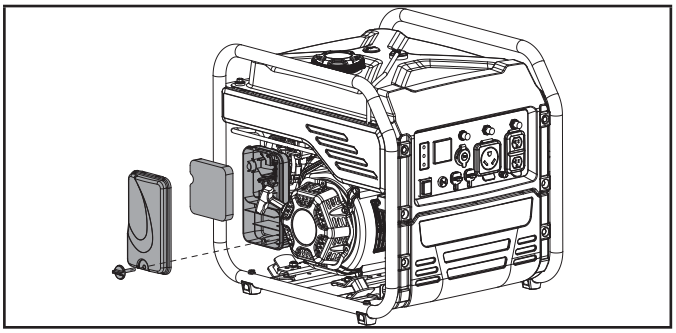

2. Remove the foam element.
3. Wash in liquid detergent and water. Squeeze thoroughly dry in a clean cloth.
4. Saturate in clean engine oil.
5. Squeeze in a clean, absorbent cloth to remove all excess oil.
6. Place the filter in the assembly.
7. Reattach the air filter cover.

Cleaning the Spark Arrestor

1. Allow the engine to cool completely before servicing the spark arrestor.
2. Remove the two screws holding the cover plate which retains the spark arrestor to the muffler.
3. Remove the spark arrestor screen.
4. Carefully remove the carbon deposits from the spark arrestor screen with a wire brush.

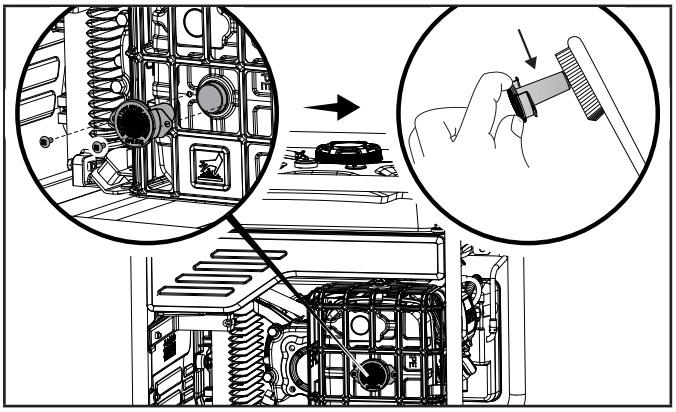

5. Replace the spark arrestor if it is damaged.
6. Position the spark arrestor on the muffler and attach with the screws removed in step 2.

⚠ CAUTION

Failure to clean the spark arrestor will result in degraded engine performance.

NOTICE

Federal and local laws and administrative requirements indicate when and where spark arrestors are required. When ordered, spark arrestors are required for operation of this generator in National Forest lands. In California, this generator must not be used on any forest-covered land, brush-covered land, or grass-covered land unless the engine is equipped with a spark arrestor.

Adjusting the Governor

⚠ WARNING

Tampering with the factory set governor will void your warranty.

The air-fuel mixture is not adjustable. Tampering with the governor can damage your generator and your electrical devices and will void your warranty. Contact our Technical Support Team at 1-877-338-0999 for all other service and/or adjustment needs.

Maintenance Schedule

Follow the service intervals indicated in the following maintenance schedule.

Service your generator more frequently when operating in adverse conditions.

Contact our Technical Support Team at 1-877-338-0999 to locate the nearest CPE certified service dealer for your generator or engine maintenance needs.

EVERY 8 HOURS OR PRIOR TO EACH USE

- ☐ Check oil level
- ☐ Clean around air intake and muffler

FIRST 5 HOURS (BREAK IN)

- ☐ Change oil

EVERY 50 HOURS OR ANNUALLY

- ☐ Clean air filter
- ☐ Change oil if operating under heavy load or in hot environments

EVERY 100 HOURS OR ANNUALLY

- ☐ Change oil
- ☐ Clean/adjust spark plug
- ☐ Clean spark arrestor
- ☐ Clean fuel valve filter*

EVERY 250 HOURS

- ☐ Clean combustion chamber*
- ☐ Check/adjust valve clearance*

EVERY 3 YEARS

- ☐ Replace fuel line*

** To be performed by knowledgeable, experienced owners or CPE certified service centers.*

STORAGE

⚠ DANGER

Gasoline vapors are highly flammable and extremely explosive.

Fire or explosion can cause severe burns or death. Only fill or drain fuel outdoors in a well-ventilated area. DO NOT pump gasoline directly into the generator. Use an approved container to transfer the fuel to the generator. Never use a gasoline container, gasoline tank, or any other fuel item that is damaged or appears damaged. DO NOT overfill the gasoline tank. Always keep fuel away from sparks, open flames, pilot lights, heat and other sources of ignition.
DO NOT light or smoke cigarettes.

Short Term Storage (up to 30 days)

Gasoline may gum up and clog the carburetor if the generator is not run or carburetor drained within 4 weeks.

1. Be sure all appliances are disconnected from the generator.
2. Start the generator as instructed in *Starting the Engine* section.
3. Turn the fuel valve to the “OFF” position.
4. Let the engine run until fuel starvation has stopped the engine. This usually takes a few minutes.
5. Move the engine switch to the “OFF” position.

Mid Term Storage (30 days – 1 year)

Gasoline in the tank has a maximum shelf life of up to 1 year with the addition of a properly formulated fuel stabilizer and stored in a cool, dry place.

1. Be sure all appliances are disconnected from the generator.
2. Add a properly formulated fuel stabilizer to the gasoline tank.
3. Turn the fuel valve to the “ON” position.
4. Start and run the generator for 10 minutes so the treated gasoline cycles through the fuel system.
5. **Option 1: Drain Gasoline from Carburetor**
   - 5a. Turn engine switch to the “OFF” position and allow generator to cool completely before continuing.
   - 5b. Turn the fuel valve to the “OFF”.
   - 5c. Use the drain bolt on the carburetor to empty any excess gasoline from the carburetor into an appropriate container. Use a funnel (and appropriate hose if necessary) under the carburetor drain bolt to avoid spillage.

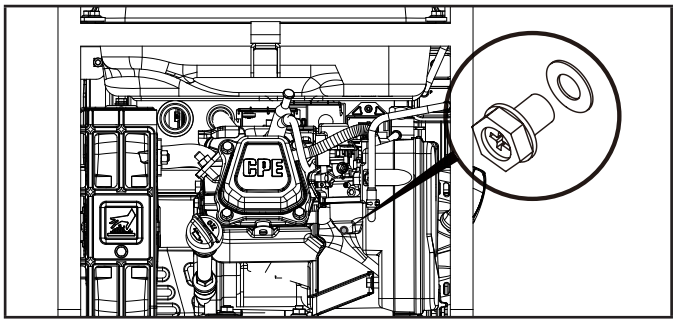

   - 5d. When gasoline stops flowing from the carburetor, replace and tighten the carburetor drain bolt and be sure to properly dispose of the drained gasoline according to local regulations or guidelines.
6. **Option 2: Run Dry**
   - 6a. With the generator running, turn the fuel valve to the “OFF” position and allow the generator to run until the engine stops from complete fuel starvation. This may take a few minutes.
   - 6b. Turn engine switch to the “OFF” position and allow generator to cool completely before continuing.
7. Remove the spark plug cap and spark plug and pour about a tablespoon of oil into the cylinder.
8. Pull the recoil cord slowly to crank the engine to distribute the oil and lubricate the cylinder.
9. Install the spark plug and spark plug cap.
10. Clean the generator according to Cleaning the Generator.
11. Store the generator in a cool, dry place out of direct sunlight.

Long Term Storage (over 1 year)

For storage over 1 year, the gasoline tank and carburetor must be completely drained of gasoline.

1. The generator is to be OFF and all appliances disconnected.
2. Turn the fuel valve to the “ON” position.
3. Use the drain bolt on the carburetor to empty any excess gasoline from the gasoline tank and carburetor into an appropriate container. Use a funnel (and appropriate hose if necessary) under the carburetor drain bolt to avoid spillage.

4. When gasoline stops flowing from the carburetor, replace and tighten the carburetor drain bolt and be sure to properly dispose of the drained gasoline according to local regulations or guidelines.
5. Turn the fuel valve to the “OFF” position.
6. Follow steps 7-11 according to *Mid* Term Storage.

Removing from Storage

If the generator has been improperly stored for a long period of time with gasoline in the gasoline tank and/or carburetor, all fuel must be drained and the carburetor must be thoroughly cleaned. This process involves technically advanced tasks. For assistance please call our Technical Support Team at 1-877-338-0999.

If the gasoline tank and carburetor were properly emptied of all gasoline prior to the generator being stored, follow the below steps when removing from storage.

1. Be sure the engine switch is in the “OFF” position.
2. Add gasoline to the generator according to *Add Fuel.*
3. Turn the fuel valve to the “ON” position.
4. After 5 minutes check the carburetor and air filter areas for any leaking gasoline. If any leaks are found, the carburetor will need to be disassembled and cleaned or replaced. If no gasoline leaks are found, turn the fuel valve to the “OFF” position.
5. Check engine oil level and add clean, fresh oil if needed. See Oil Specifications for proper oil type.
6. Check and clear air filter of any obstructions such as bugs or cobwebs. If necessary, clean air filter according to Cleaning the Air Filter.
7. Start the generator according to Starting the Engine.

SPECIFICATIONS

Generator Specifications

Generator Model	100892
Start Type	Manual
Watts (Starting/Running)	4500/3650
Volts AC	120
AC Amps @ 120V	30.4
Volts DC	12
DC Amps	8
Frequency	60 Hz
Phase	Single
Grounding Type	Neutral Floating
Weight	75 lb. (34 kg)
Length	20.9 in. (53.2 cm)
Width	18.3 in. (46.6 cm)
Height	19.4 in. (49.4 cm)

Engine Specifications

Model	GB225-2
Displacement	224 cc
Type	4-Stroke OHV

Spark Plug

OEM Type	F6RTC
Replacement Type	NGK BPR6ES or equivalent
Gap	0.024 - 0.031 in. (0.6-0.8 mm)

Valve

Intake Clearance	0.004-0.006 in. (0.10-0.15 mm)
Exhaust Clearance	0.006-0.008 in. (0.15-0.20 mm)

NOTICE

A technical bulletin regarding valve adjustment procedures is available at www.championpowerequipment.com.

Oil Specifications

DO NOT OVERFILL.

Type	*See following chart
Capacity	18.6 fl. oz. (550 ml)

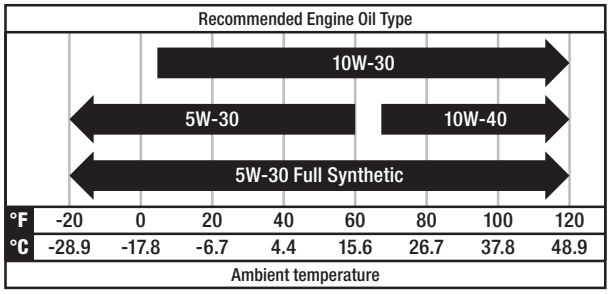

NOTICE

Temperature will affect engine oil and engine performance. Change the type of engine oil used based on the temperature to suit the engine needs.

Fuel Specifications

Use unleaded gasoline with a minimum octane rating of 87 and an ethanol content of 10% or less by volume. DO NOT USE E15 or E85. DO NOT OVERFILL.

Gasoline Capacity	4 gal. (15.2 L)

Temperature Specifications

Starting Temperature Range (°F/°C)	5 to 104/-15 to 40

NOTICE

An important message about temperature: Your product is designed and rated for continuous operation at ambient temperatures up to 104°F (40°C). When needed, it may be operated at temperatures ranging from 5°F (-15°C) to 122°F (50°C) for short periods of time. If exposed to temperatures outside this range during storage, it should be brought back within this range before operation. In any event, the product must always be operated outdoors, in a well-ventilated area and away from doors, windows and vents.

Parts Diagram

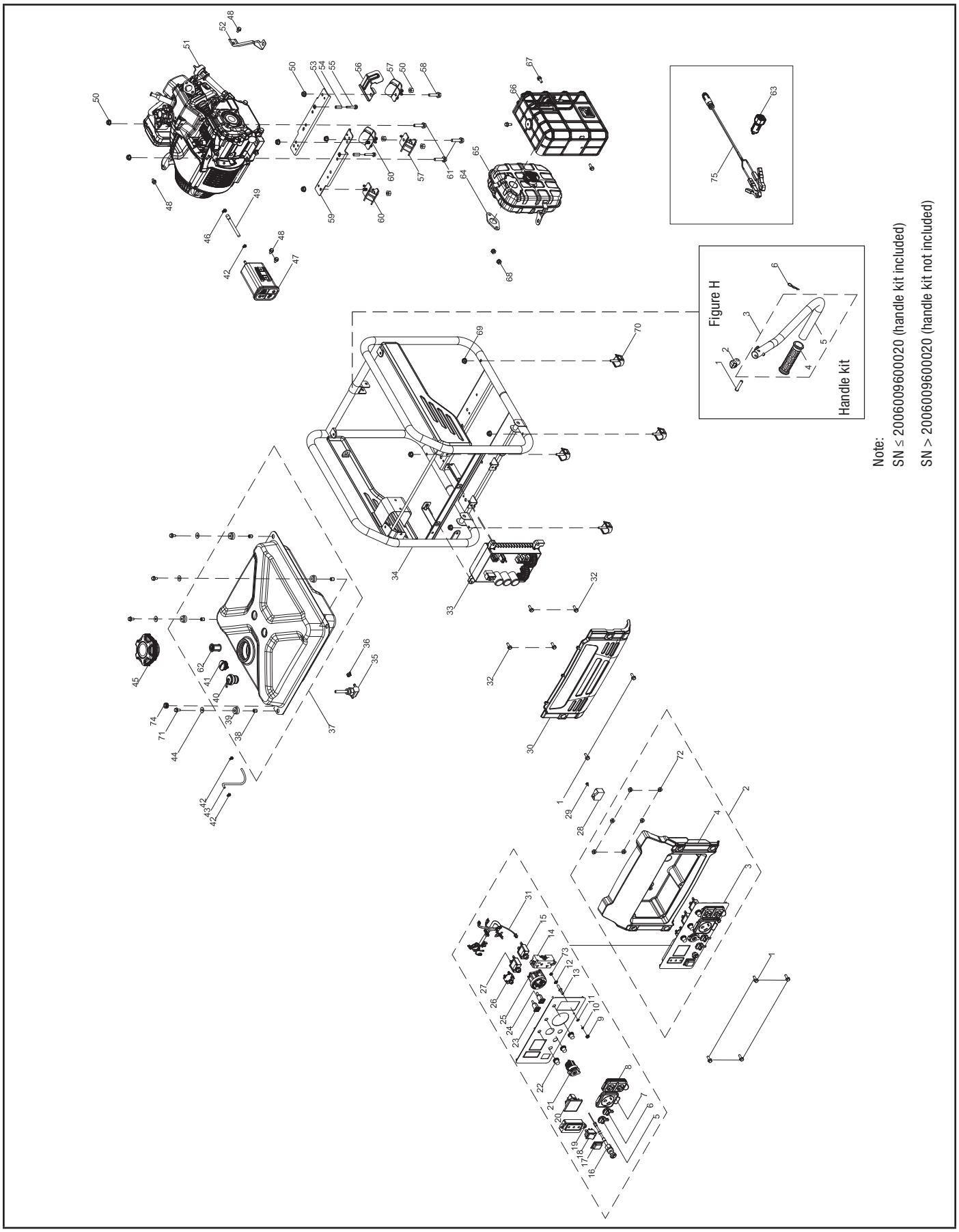

Parts List

#	Part Number	Description	Qty.
1	100011264-0002	Flange Bolt M6 x 16	6
2	100710624-0001	Panel Assembly	1
3	100710622	Control Panel	1
4	100142006-0001	Protect Panel	1
5	100150096-0001	Cover, Parallel Terminal, Red	1
6	100150096-0002	Cover, Parallel Terminal, Black	1
7	100088268	Receptacle Cover, TT-30R	1
8	100098921	Receptacle Cover, 5-20R, Duplex	1
9	100011421-0002	Flange Nut M6	1
10	100010886-0002	Spring Washer Ø6	1
11	100010910-0002	Washer Ø6	1
12	100011025-0001	Lock Washer Ø6, Toothed	1
13	100092320-0002	Ground Stud	1
14	100020029	Receptacle 5-20R, Duplex	1
15	100019747	20Amp Circuit Breaker, Push Button	1
16	100154334	Cable	1
17	100126120	Switch Cover	1
18	100019760-0001	Switch	1
19	100152493	LED Display Module	1
20	100710623	Intelligauge	1
21	100019782	Receptacle, 12 VDC	1
22	100120180	Cover, Circuit Breaker	3
23	100091059-0001	Parallel Terminal, Red	1
24	100091059-0002	Parallel Terminal, Black	1
25	100020008	Receptacle TT-30R	1
26	100057719	8Amp Circuit Breaker, Push Button	1
27	100019756	30Amp Circuit Breaker, Push Button	1
28	100156648	Rectifier Bridge, Capacitance	1
29	100032967-0002	Self-tapping Screw ST4.2 x 16	1
30	100142007-0003	Protective Cover, Inverter Module	1
31	100710877	Wire Harness Assembly	1
32	100011268-0003	Flange Bolt M6 x 25, GB5789	4

#	Part Number	Description	Qty.
33	100710871	Inverter Module, 120V 60Hz	1
34	100142008-0001	Frame 530 x 453 x 480	1
35	100136320	Fuel Valve	1
36	100005138	Clamp Ø9.5 x 8	1
37	100142005-0001	Fuel Tank, 15.2 L, Yellow	1
38	100715500	Bushing, Ø9 x Ø6.6 x 10	4
39	100711813	Vibration Mounting, Fuel Tank	4
40	100099571	Reversal Valve	1
41	100153185	Fuel Gauge	1
42	100005148	Clamp Ø8	3
43	100152501	Connection Tube 2, 475 mm	1
44	100010437-0001	Washer Ø6.5 x 1.5 x Ø18.2	4
45	100142004	Fuel Tank Cap	1
46	100005159	Clamp Ø10.5 x 8	1
47	100157588	Carbon Canister, 320 cc	1
48	100011260-0005	Flange Bolt M6 x 10, GB5789	4
49	100155508	Connection Tube 1, 475 mm	1
50	100079483-0001	Flange Nut M8	10
51	1ZC7DFA08	Engine, 224 cc	1
52	100158476	Holder, Air Cleaner	1
53	100162855	Engine Front Board	1
54	100004221-0001	Bushing, Ø6.5 x Ø10 x 24	2
55	100011271-0003	Flange Bolt M6 x 35	2
56	100162980	Insulator	1
57	100093523	Vibration Mount, Support 2	2
58	100011327-0001	Flange Bolt M8 x 43	1
59	100162854	Engine Rear Board	1
60	100093524	Vibration Mount, Support 1	2
61	100011320-0002	Flange Bolt M8 x 35	3
62	100098838	Fuel Filter	1
63	100155005	Dual Port USB Adapter (5v/2.4A)	1
64	100058175	Gasket, Muffler, Graphite	1
65	100151975	Exhaust Muffler Assembly	1
66	100142015-0001	Muffler Cover	1

#	Part Number	Description	Qty.
67	100097575-0002	Flange Bolt M6 x 10	3
68	100011422-0004	Flange Nut M8, GB6170	2
69	100011452-0002	Flange Nut M6, GB6177.1	4
70	100093522	Damping Pad	4
71	100011267-0002	Flange Bolt M6 x 22	4
72	100011446-0001	Flange Nut M4	6
73	100011419-0003	Flange Nut M5	1
74	100009075	Sheath, Connection Tube	1
75	100155004	12VDC Battery Charging Cable	1
Figure H - Handle Kit Only included in models with SN ≤ 2006009600020			
1	100011047-0003	Roll Pin Ø8 x 40	1
2	100163607	Handle Stop Block	1
3	100142009-0001	Handle Assembly	1
4	100031982	Sheath, Handle	1
5	100717556-0001	Handle	1
6	100023415-0001	R-pin	1

Engine Parts Diagram

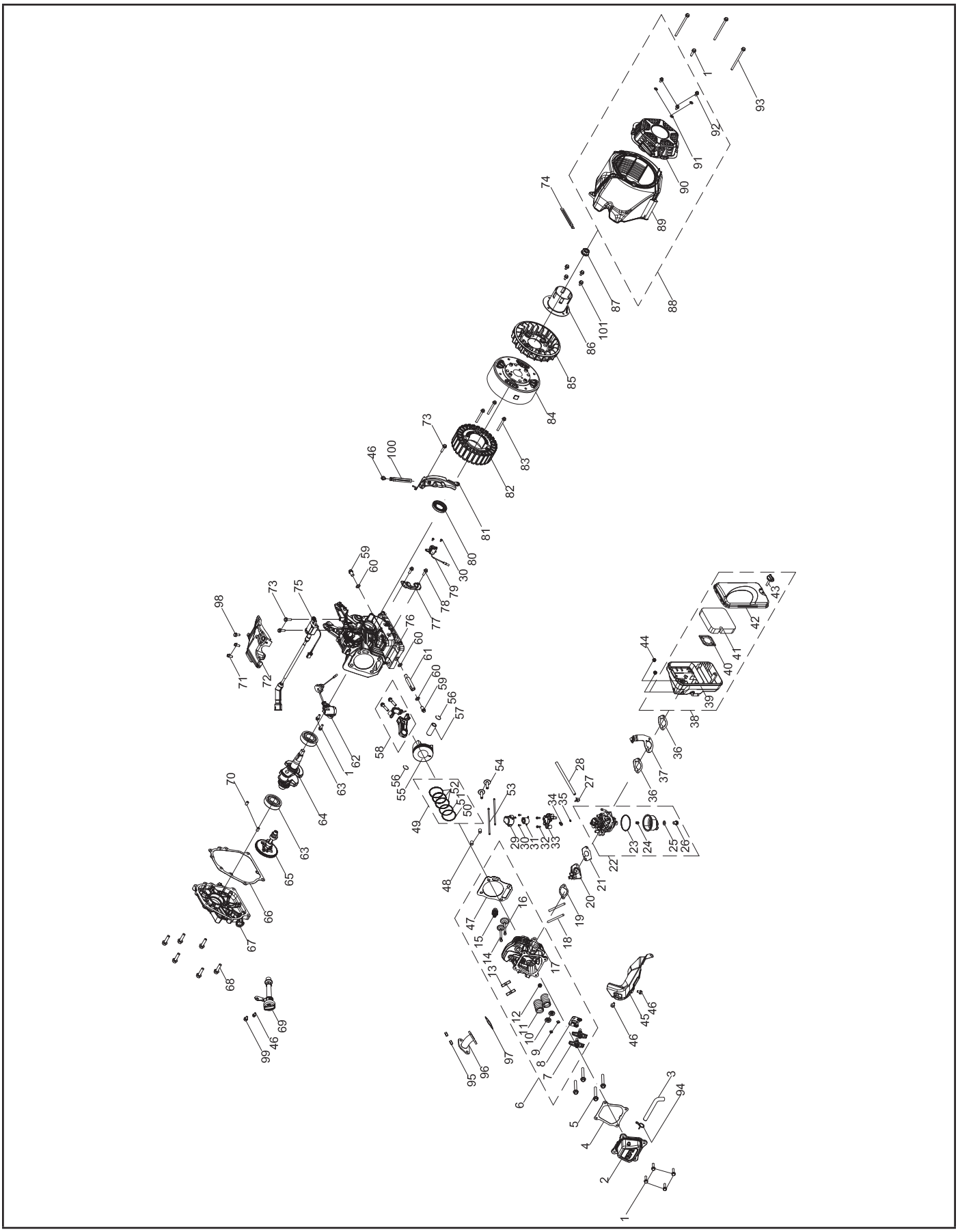

Engine Parts List

#	Part Number	Description	Qty.
1	100011264-0003	Flange Bolt M6 x 16, GB5789	7
2	100002335	Cylinder Head Cover(Cpe)	1
3	100075045	Breather Tube	1
4	100066138	Gasket, Cylinder Head Cover	1
5	100002464-0001	Flange Bolt M8 x 60	4
6	100159588	Cylinder Head Assembly	1
7	100149239	Rocker Arm Assembly	2
8	100050881	Guide Plate, Push Rod	1
9	100050896	Valve Collet	4
10	100073758	Valve Spring Seat, Exhaust	2
11	100713979	Spring Valve	2
12	100004599	Oil Seal, Valve	1
13	100010387	Stud Bolt M8 x 34	2
14	100713981	Valve Exhaust	1
15	100009378	Spark Plug F6RTC	1
16	100713980	Valve Intake	1
17	100079792	Cylinder Head	1
18	100061091	Stud Bolt M6 x 98	2
19	100078607	Gasket, Insulator	1
20	100122101	Insulator, Carburetor	1
21	100078606	Gasket, Carburetor	1
22	100153290	Carburetor	1
23	100005717	Fuel Bowl O-Ring	1
24	100005750	Main Jet Standard	1
	100005757	Main Jet Altitude 1000-2000m	/
	100005766	Main Jet Altitude 2000-3000m	/
25	100006037	Fuel Bowl Mounting Bolt Gasket	1
26	100005725	Fuel Bowl Mounting Bolt	1
27	100005138	Clamp	1
28	100017831	Fuel Pipe, Ø4 x Ø10 x 126	1
29	100050035	Protection Cover	1
30	100051029-0004	Screw M4 x 6	4
31	100093486	Stepping Motor	1
32	100010947-0001	Screw M4 x 12	2
33	100158241	Stepping Motor Seat	1
34	100033258	Clamp, Stepping Motor Guide	1
35	100052405	Spring	1

#	Part Number	Description	Qty.
36	100713488	Gasket, Air Filter Base	2
37	100142011	Choke Lever Rack	1
38	100153222	Air Filter Assembly	1
39	100156312	Air Filter Base	1
40	100005078	Air Filter Baffle	1
41	100004771	Air Filter Element	1
42	100087055	Air Filter Cover	1
43	100004949	Air Filter Bolt	1
44	100011463-0002	Flange Nut M6	2
45	100007083	Air Guide, Lower	1
46	100011260-0005	Flange Bolt M6 x 10	4
47	100155656	Gasket, Cylinder Head	1
48	100010558	Dowel Pin Ø10 x 16	2
49	100003243	Piston Ring Set	1
50	100072134	1st Piston Ring	1
51	100072135	2nd Piston Ring	1
52	100072136	Oil Ring	1
53	100149269	Push Rod	2
54	100149234	Lifter, Valve	2
55	100003086	Piston	1
56	100003221	Circlip	2
57	100003123	Wrist Pin	1
58	100003446	Connecting Rod	1
59	100010272	Drain Bolt, M10 x 1.25 x 15	2
60	100010459	Washer Ø10 x 1.5 x Ø16	3
61	100002910-0001	Drain Tube	1
62	100163603	Oil Level Sensor	1
63	100010761	Bearing, TM6205	2
64	100126476	Crankshaft	1
65	100099599	Camshaft	1
66	100010148	Gasket, Crankcase Cover	1
67	100128008	Cover, Crankcase	1
68	100011319-0001	Flange Bolt M8 x 32	6
69	100152738-0001	Oil Dipstick Assembly	1
70	100010550	Dowel Pin Ø8 x 14	2
71	100011215-0001	Flange Bolt M6 x 12	2
72	100122168	Control Assembly	1
73	100011266-0004	Flange Bolt M6 x 20	3
74	100000655	Wire Clip B	1
75	100163601	Ignition Module	1
76	100149610	Crankcase	1
77	100122099	Trigger Support	1

#	Part Number	Description	Qty.
78	100055591-0007	Flange Bolt M6 x 12, GB16674	2
79	100163602	Trigger	1
80	100017644	Oil Seal Ø25 x Ø41.25 x 6	1
81	100130948	Lower Guard	1
82	100153854	Stator Assembly, Cu, Ø156 x 35 mm	1
83	100011540-0007	Flange Bolt M6 x 50	3
84	100126953	Rotor Assembly, Permanent Magneto, Ø180 x 64 mm	1
85	100087582	Cooling Fan	1
86	100087581	Pulley, Starter	1
87	100011459-0003	Flange Nut M14 x 1.5	1
88	100153289-0003	Recoil Starter Assembly	1
89	100128650-0001	Fan Cover, Black	1
90	100156547-0001	Recoil Starter, Black	1
91	100010894-0002	Washer Ø6	3
92	100011565-0002	Flange Bolt M6 x 10, GB16674.1	3
93	100011284-0003	Flange Bolt M6 x 100	3
94	100005152	Clamp Ø11.5	1
95	100011422-0004	Flange Nut M8, GB6170	2
96	100142016	Exhaust Pipe	1
97	100006526	Gasket, Muffler	1
98	100055588-0006	Flange Bolt M6 x 20, GB16674	1
99	100011263-0002	Flange Bolt M6 x 15	1
100	100062546	Wire Clip B 1	1
101	100011581-0001	Flange Bolt M6 x 14	4

Wiring Diagram

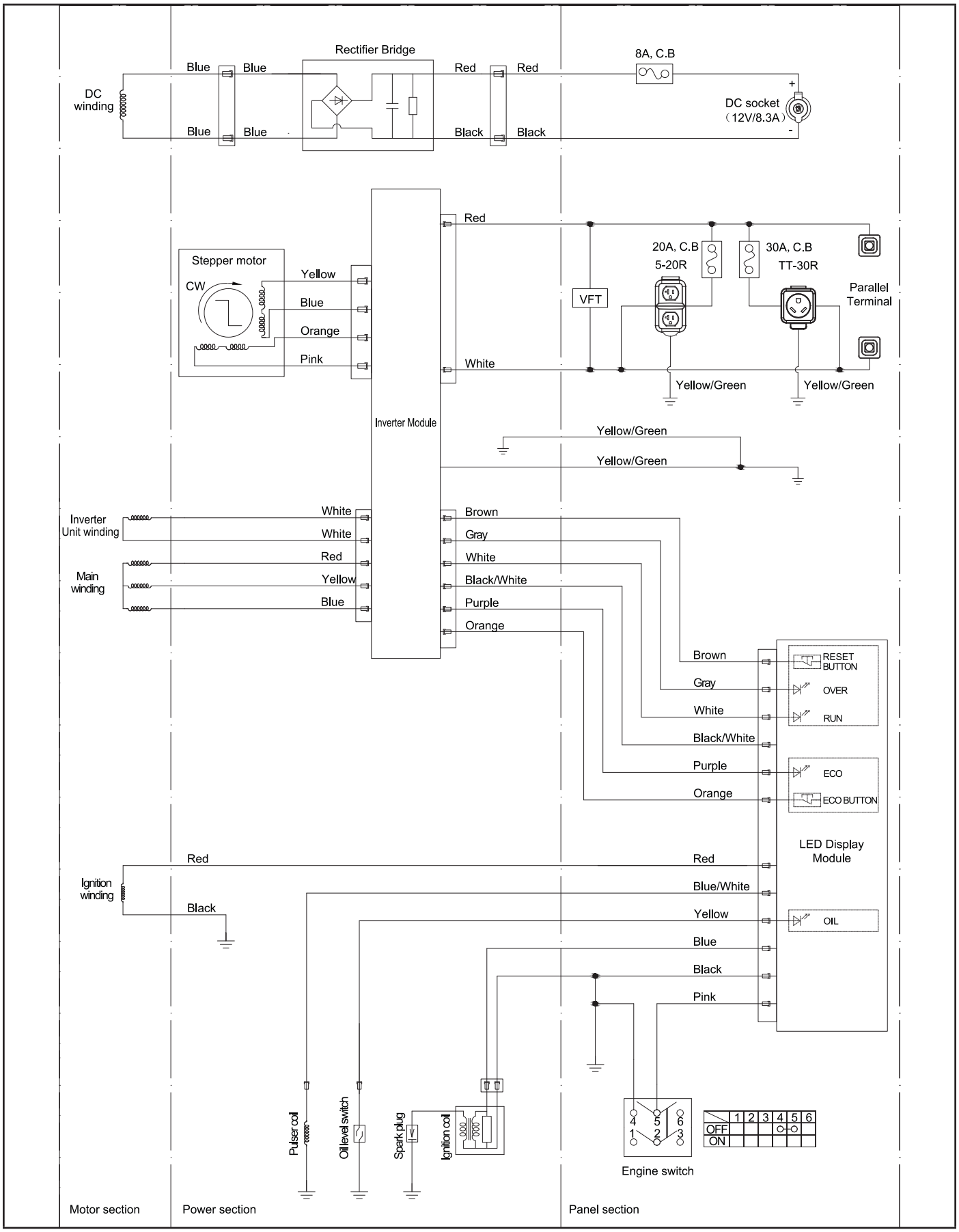

TROUBLESHOOTING

Problem	Cause	Solution
Engine will not start.	No fuel.	Add fuel.
	Faulty spark plug.	Clean and adjust spark plug or replace.
	Low oil level.	Fill crankcase to the proper level.
		Place generator on a flat, level surface.
	Spark plug wire loose.	Attach wire to spark plug.
	Fuel valve is closed.	Open fuel valve.
	Engine switch OFF.	Press engine switch ON.
	Old fuel or water in fuel.	Drain fuel and replace with fresh fuel.
	Flooded with fuel.	Let unit stand for 10 mins.
Engine starts but runs roughly.	Choke in the wrong position.	Move choke until it stops under RUN position or push in completely.
	Dirty air filter.	Clean or replace air filter.
	Dirty fuel valve.	Clean the fuel valve.
	Clogged spark arrestor.	Clean spark arrestor.
Engine shuts down during operation.	Out of fuel.	Fill fuel tank.
	Low oil level.	Fill crankcase to the proper level. Place generator on a flat, level surface.
	Clogged spark arrestor.	Clean spark arrestor.
Generator cannot supply enough power or overheating.	Generator is overloaded.	Review load and adjust. See “Connecting Electrical Loads.”
	Dirty air filter.	Clean or replace air filter.
	Choke in wrong position.	Move choke until it stops under RUN position or push in completely.
Engine is running but no AC output.	Poor cord connection.	Check all connections.
	Circuit breaker is open.	Reset circuit breaker.
	Loose wiring.	Inspect and tighten wiring connections.
	Other.	Contact the help line.
Engine hunts or falters.	Engine governor defective.	Contact the help line.
	Dirty fuel valve.	Clean the fuel valve.
	Carburetor is dirty and running lean.	Contact the help line.
	Choke in wrong position.	Move choke until it stops under RUN position or push in completely.
Repeated circuit breaker tripping.	Overload.	Review load and adjust. See “Connecting Electrical Loads.”
	Faulty power cords or device.	Check for damaged, bare or frayed wires. Replace defective device.
	Circuit breaker still too hot.	Let unit sit for 5 mins.

For other issues and technical support:

Technical Support Team
Toll Free 1-877-338-0999
support@championpowerequipment.com

WARRANTY*

CHAMPION POWER EQUIPMENT
3 YEAR LIMITED WARRANTY

Warranty Qualifications

To register your product for warranty and FREE lifetime call center technical support please visit:
https://www.championpowerequipment.com/register

To complete registration you will need to include a copy of the purchase receipt as proof of original purchase. Proof of purchase is required for warranty service. Please register within ten (10) days from date of purchase.

Repair/Replacement Warranty

CPE warrants to the original purchaser that the mechanical and electrical components will be free of defects in material and workmanship for a period of three years (parts and labor) from the original date of purchase and 270 days (parts and labor) for commercial and industrial use. Transportation charges on product submitted for repair or replacement under this warranty are the sole responsibility of the purchaser. This warranty only applies to the original purchaser and is not transferable.

Do Not Return The Unit To The Place Of Purchase

Contact CPE's Technical Service and CPE will troubleshoot any issue via phone or e-mail. If the problem is not corrected by this method, CPE will, at its option, authorize evaluation, repair or replacement of the defective part or component at a CPE Service Center. CPE will provide you with a case number for warranty service. Please keep it for future reference. Repairs or replacements without prior authorization, or at an unauthorized repair facility, will not be covered by this warranty.

Warranty Exclusions

This warranty does not cover the following repairs and equipment:

Normal Wear

Products with mechanical and electrical components need periodic parts and service to perform well. This warranty does not cover repair when normal use has exhausted the life of a part or the equipment as a whole.

Installation, Use and Maintenance

This warranty will not apply to parts and/or labor if the product is deemed to have been misused, neglected, involved in an accident, abused, loaded beyond the product's limits, modified, installed improperly or connected incorrectly to any electrical component. Normal maintenance is not covered by this warranty and is not required to be performed at a facility or by a person authorized by CPE.

Other Exclusions

This warranty excludes:

- Cosmetic defects such as paint, decals, etc.
- Wear items such as filter elements, o-rings, etc.
- Accessory parts such as starting batteries, and storage covers.
- Failures due to acts of God and other force majeure events beyond the manufacturer's control.
- Problems caused by parts that are not original Champion Power Equipment parts.

When applicable, this warranty does not apply to products used for prime power in place of a utility.

Limits of Implied Warranty and Consequential Damage

Champion Power Equipment disclaims any obligation to cover any loss of time, use of this product, freight, or any incidental or consequential claim by anyone from using this product.
THIS WARRANTY AND THE ATTACHED U.S. EPA and/or CARB EMISSION CONTROL SYSTEM WARRANTIES (WHEN APPLICABLE) ARE IN LIEU OF ALL OTHER WARRANTIES, EXPRESS OR IMPLIED, INCLUDING WARRANTIES OF MERCHANTABILITY OR FITNESS FOR A PARTICULAR PURPOSE.

A unit provided as an exchange will be subject to the warranty of the original unit. The length of the warranty governing the exchanged unit will remain calculated by reference to the purchase date of the original unit.

This warranty gives you certain legal rights which may change from state to state or province to province. Your state or province may also have other rights you may be entitled to that are not listed within this warranty.

Contact Information

Address

Champion Power Equipment, Inc.
12039 Smith Ave.
Santa Fe Springs, CA 90670 USA
www.championpowerequipment.com

Customer Service

Toll Free: 1-877-338-0999
info@championpowerequipment.com
Fax no.: 1-562-236-9429

Technical Service

Toll Free: 1-877-338-0999
tech@championpowerequipment.com
24/7 Tech Support: 1-562-204-1188

*Except as otherwise stipulated in any of the following enclosed Emission Control System Warranties (when applicable) for the Emission Control System: U.S. Environment Protection Agency (EPA) and/or California Air Resources Board (CARB). Whichever warranty applies for the longer period, either this 3 year limited warranty or the applicable Emission Control System Warranty, shall supersede the other.