CHAMPION
GLOBAL POWER EQUIPMENT™-MC

INSTALLATION MANUAL

HOME STANDBY GENERATOR

Model 100515 (14 kW)
Model 100304 (22 kW)

ACTIVATE YOUR WARRANTY

by registering your product:
championpowerequipment.com

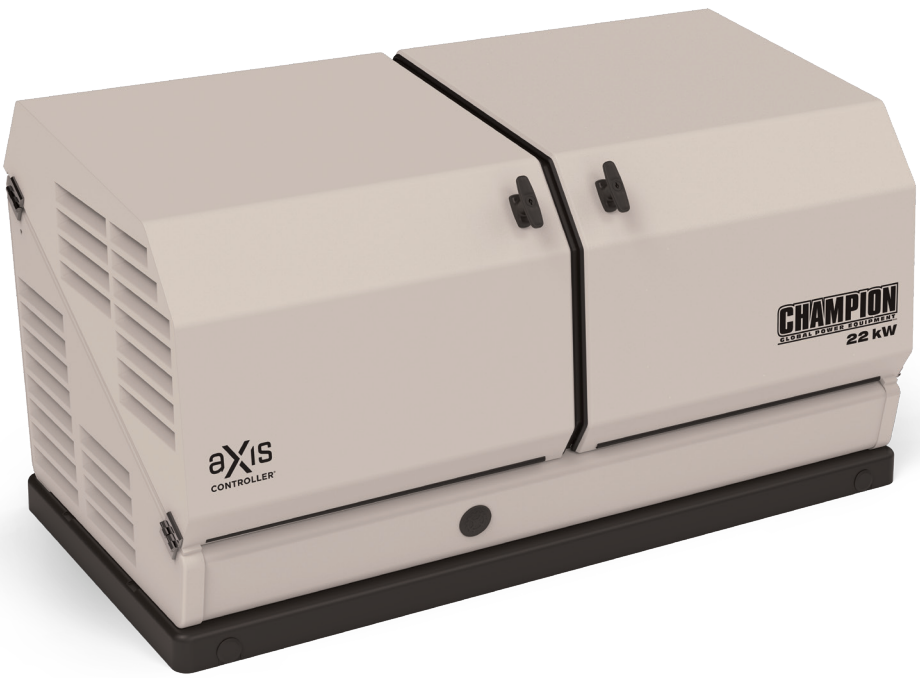

C ETL LISTED US
Intertek

1-877-338-0999

or visit **championpowerequipment.com**

SAVE THESE INSTRUCTIONS. This manual contains important safety precautions which should be read and understood before operating the product. Failure to do so could result in serious injury. This manual should remain with the product.

Specifications, descriptions and illustrations in this manual are as accurate as known at the time of publication, but are subject to change without notice.

No part of this publication may be reproduced or used in any form by any means – graphic, electronic or mechanical, including photocopying, recording, taping or information storage and retrieval systems – without the written permission of Champion Power Equipment (CPE).

REV 20250313

Have questions or need assistance?
Do not return this product to the store!

WE ARE HERE TO HELP!

Visit our website:

www.championpowerequipment.com

for more info:

Product Info & Updates	Tech Bulletins
Frequently Asked Questions	Product Registration

– or –

Call our Customer Care Team Toll-Free at:

1-877-338-0999

** We are always working to improve our products. Therefore, the enclosed product may differ slightly from the image on the cover.*

TABLE OF CONTENTS

Introduction **4**

Home Standby Generator **4**

Parts Included 4

Safety **5**

Safety Definitions 5

Important Safety Instructions **6**

Carbon Monoxide Hazards 6

Installation Hazards 7

Before Starting 7

Operation Hazards 7

Accidental Starting 8

Electrical Shock Hazards 8

Fuel Safety 8

Burn Hazards 9

Entanglement Hazards 9

Battery Hazards 9

Safety Symbols 10

Safety Labels and Hang Tags **12**

Safety, Serial/Model, Nameplate Label Locations 14

Specifications **15**

14-kW (Model 100515) Specifications 15

22-kW (Model 100304) Specifications 16

14-kW (Model 100515) Engine Torque Specifications 17

22-kW (Model 100304) Engine Torque Specifications 17

Master Mixing Assembly Jets (Carburetor System) - Both models 17

Alternator Overview 18

Unpacking **18**

Installation **19**

Placement & Installation Guidelines for Champion Home Standby Generators to Reduce the Risk of Fire 19

Intertek Group PLC Label 20

Site Selection, Preparation and Placement 21

Installation Preparation 24

Battery Charger 33

Surge protection 37

AVR = Automatic Voltage Regulator 37

Engine Relay Module 38

Exterior Warning LED 39

Generator ON/OFF Switch 39

Microswitch 40

aXis Controller® 40

Wi-Fi Setup Method 44

ATS and HSB Status Using WIFI 46

Programming aXis Controller® 46

Automatic Transfer Switch (ATS) 48

aXis Controller® Module 48

ATS Installation 48

Commissioning the ATS 49

HSB Test 49

Checking Automatic Operation 51

Installing Standby Generator to non-aXis Controller® ATS 52

Customer Familiarization Summary 52

Maintenance **52**

102006, 102007, 102008, 102009, 102010 ATS Wiring Diagram 53

Troubleshooting HSB **54**

HSB, ATS Model & Serial Reference ATS Back-up Circuits 56

INTRODUCTION

Congratulations on your purchase of a Champion Power Equipment (CPE) product. CPE designs, builds, and supports all of our products to strict specifications and guidelines. With proper product knowledge, safe use, and regular maintenance, this product should bring years of satisfying service.

Every effort has been made to ensure the accuracy and completeness of the information in this manual at the time of publication, and we reserve the right to change, alter and/or improve the product and this document at any time without prior notice.

CPE highly values how our products are designed, manufactured, operated, and serviced as well as providing safety to the operator and those around the generator. Therefore, it is IMPORTANT to review this product manual and other product materials thoroughly and be fully aware and knowledgeable of the assembly, operation, dangers and maintenance of the product before use. Fully familiarize yourself, and make sure others who plan on operating the product fully familiarize themselves too, with the proper safety and operation procedures before each use. Please always exercise common sense and always err on the side of caution when operating the product to ensure no accident, property damage, or injury occurs. We want you to continue to use and be satisfied with your CPE product for years to come.

When contacting CPE about parts and/or service, you will need to supply the complete model and serial numbers of your product. Transcribe the information found on your product's nameplate label to the table below

CPE TECHNICAL SUPPORT TEAM
1-877-338-0999
MODEL NUMBER
SERIAL NUMBER
DATE OF PURCHASE
PURCHASE LOCATION

HOME STANDBY GENERATOR

This home standby generator is intended exclusively for outdoor installation. This generator will operate using either liquified petroleum gas (LPG) or natural gas (NG).

This generator is designed to supply typical home load such as:

Induction motors – sump pumps, refrigerators, air conditioners, furnaces

Electronic items – televisions, computers

Household lighting

Microwaves

This generator is not intended for use in critical life support applications.

Proper sizing of the generator is required to ensure safe operation of appliances. Some appliances require additional wattage to start and must be considered in the sizing of the generator.

Parts Included

Your HSB ships with the following:

- Operators Manual
- Installation Manual
- Oil Drain Pan (14 kW [Model 100515] only)
- Flexible Fuel Line
- HSB Enclosure Keys
- Battery Series Cable
- LPG Low-speed and Main Converting Jets (14 kW [Model 100515] only)
- Jet Change Tool (14 kW [Model 100515] only)
- Jet Block Tool for changing NG to LPG - 4 mm allen wrench (14 kW [Model 100515, 100304)
- Master Mixer Assembly (22 kW [Model 100304] only)

Battery Hardware (14 kW [Model 100515] only)

- 4 pieces - lock nut M6
- 4 pieces - washer, Ø6 mm
- 4 pieces - flange bolt, M6 x 1.0-15

Hurricane Pad Hardware (22 kW [Model 100304] only)

- 4 pieces - washer, Ø0.984 x Ø0.402 x 0.106-in USS
- 4 pieces - flange bolt, 0.375-16 x 2.00-in

SAFETY

Safety Definitions

The purpose of safety symbols is to attract your attention to possible dangers. The safety symbols, and their explanations, deserve your careful attention and understanding. The safety warnings do not by themselves eliminate any danger. The instructions or warnings they give are not substitutes for proper accident prevention measures.

⚠ DANGER

DANGER indicates a hazardous situation which, if not avoided, will result in death or serious injury.

⚠ WARNING

WARNING indicates a hazardous situation which, if not avoided, could result in death or serious injury.

⚠ CAUTION

CAUTION indicates a hazardous situation which, if not avoided, could result in minor or moderate injury.

NOTICE

NOTICE indicates information considered important, but not hazard-related (e.g., messages relating to property damage).

IMPORTANT SAFETY INSTRUCTIONS

⚠ WARNING

Cancer and Reproductive Harm – www.P65Warnings.ca.gov

Carbon Monoxide Hazards

⚠ DANGER

Generator exhaust contains carbon monoxide (CO), a colorless, odorless, poisonous gas. Breathing carbon monoxide (CO) will cause nausea, dizziness, fainting or death. If you start to feel dizzy or weak, get to fresh air immediately.

GENERATOR MUST BE INSTALLED AND OPERATED OUTDOORS ONLY.

Carbon monoxide (CO) poisoning symptoms include but are not limited to the following:

- Lightheadedness, dizziness, blurred vision
- Physical fatigue, weakness in joints and muscles
- Mental fatigue, sleepiness, inability to concentrate or speak clearly,
- Stomachache, vomiting, nausea

In the event of carbon monoxide (CO) poisoning:

- Seek fresh air immediately
- DO NOT sit, lie down or fall asleep.
- Alert others to the possibility of carbon monoxide (CO) poisoning.
- If the affected person does not improve within minutes of breathing fresh air, call 911 immediately for medical assistance.

⚠ DANGER

Carbon Monoxide (CO) is a colorless, odorless, poisonous gas. Breathing carbon monoxide will cause nausea, dizziness, fainting or death.

Generator must be installed and operated outdoors only.

NEVER allow exhaust fumes to enter a confined area through windows, doors, air intake vents or other openings of the building.

ALWAYS avoid breathing exhaust fumes when near an operating generator.

NEVER alter the generator or modify the exhaust system thereby creating noncompliance with Federal and State emissions regulations, local applicable codes, standards and laws.

NEVER allow blockage of the engine's air intake cooling ventilation system. Doing so can seriously affect performance and safe operation of the generator.

⚠ WARNING

Always install a battery-operated Carbon Monoxide (CO) detector on each level of any building or home dwelling adjacent to the generator location following the Carbon Monoxide (CO) detector manufacturer's installation instructions.

In many U.S. States and Canadian Provinces, it is required by law to have a Carbon Monoxide (CO) detector installed on each level of an occupied building or home dwelling.

The Carbon Monoxide (CO) detector is a device that detects elevated levels of poisonous Carbon Monoxide (CO) gas and will alert the occupants by flashing a visual light indicator and an audible alarm.

The Carbon Monoxide (CO) detector alarm will not sense smoke, fire, or any other poisonous gas other than carbon monoxide.

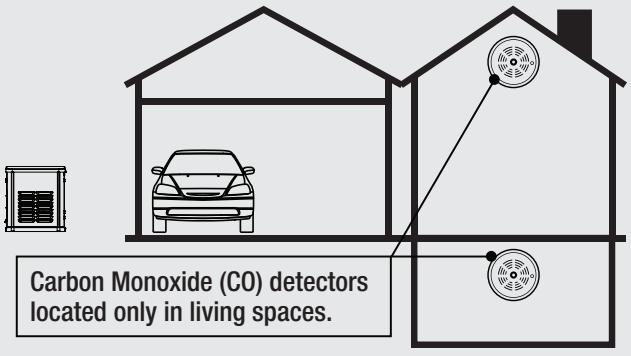

⚠ WARNING

Smoke alarms cannot detect Carbon Monoxide (CO) gas.

To better educate yourself about all carbon monoxide risks, go to www.takeyourgeneratoroutside.com

⚠ WARNING

Do not use generator for medical life support uses.

In case of emergency, call 911 immediately.

NEVER use this product to power life support devices or life support appliances.

Inform your electricity provider immediately if you or anyone in your household depends on electrical equipment to live.

Inform your electrical provider immediately if a loss of power would cause you or anyone in your household to experience a medical emergency.

Installation Hazards

⚠ WARNING

Always have a qualified electrician or installation technician who are familiar with applicable safety codes, standards and regulations to install and service the generator.

ALWAYS comply with local, state and national electrical and building codes when installing the generator.

NEVER alter the recommended installation in a way that would render the unit non compliant with these codes.

ALWAYS comply with regulations that Occupational Safety and Health Administration (OSHA) has established.

ALWAYS follow the generator manufacturer's instructions.

Before Starting

⚠ WARNING

Before operation, read and understand the features and controls of the generator, including the safety and maintenance sections of this manual.

The owner/operator is responsible for all periodic maintenance.

Complete all scheduled maintenance in a timely manner.

Correct any issue before operating the generator.

The owner/operator is responsible for the safe operation of this generator.

If any portion of this manual is not understood, contact your Champion dealer for assistance before operating the generator.

For service or parts assistance, contact your Champion dealer if repairs are needed.

Operation Hazards

⚠ WARNING

ALWAYS operate the generator following the manufacturer's instructions. Operating the generator improperly or neglecting maintenance can result in serious injury or possible death.

DO NOT allow children or unqualified persons to operate or service the generator.

NEVER operate the generator with the covers open. Only operate the generator with the covers closed and secured in place.

NEVER leave the generator covers unlocked.

NEVER work on the generator when physically or mentally fatigued. Remain alert at all times when working on the generator.

NEVER operate the generator while under the influence of alcohol or drugs.

NEVER climb or step on any part or components of the generator. Doing so may result in personal injury and cause damage to the exhaust system and/or create leakage to the fuel system.

Accidental Starting

⚠ WARNING

ALWAYS prevent the generator from starting while the covers are open. The generator may crank and start at any time without notice. Follow these steps in order:

1. Pull fuse from aXis Controller® panel and secure with tape to the panel.
2. Disconnect the NEGATIVE, NEG or (-) battery cable first, and then remove the POSITIVE, POS or (+) battery cable.

To return the generator to service, follow these steps in order:

1. Connect the POSITIVE, POS or (+) battery cable first, and then connect the NEGATIVE, NEG or (-) battery cable.
2. Remove taped fuse from the panel and reinstall into the aXis Controller®.

Electrical Shock Hazards

⚠ WARNING

The generator produces dangerous voltage. Use extreme caution when near the generator while it is operating.

Avoid contact with bare wires, terminals and connections while the generator is operating.

ALWAYS stand on an insulated dry surface to reduce shock hazard if work must be done on an operating generator.

NEVER wear jewelry that can conduct electricity when working on the generator.

NEVER handle any kind of electrical device while hands or feet are wet, while standing in water or while barefoot.

Proper earth grounding of the frame and external electrical conductive components is required by the National Electrical Code (NEC). State and local codes for proper grounding may also apply.

Avoid direct contact with an electric shock victim. Immediately shut down the source of electrical power. If this is not possible, attempt to free the victim from the live conductor using a nonconducting item such as a dry board or rope. If the victim is unconscious, apply first aid and call 911 immediately.

Fuel Safety

⚠ DANGER

PROPANE AND NATURAL GAS ARE HIGHLY FLAMMABLE AND EXPLOSIVE.

Fire or explosion can cause severe burns or death.

Propane/LPG (liquified petroleum gas) and LPG Vapors:

LPG is a hydrocarbon gas that exists in a liquified form and it's vapors are highly flammable and explosive.

LPG and it's vapors are under pressure and can cause a fire or explosion if ignited.

LPG vapors are heavier than air and will settle in low places while dissipating.

LPG itself is odorless and tasteless. For safety, a chemical is added to give it an odor to help detect leaks quickly.

If a leak is detected, IMMEDIATELY turn OFF the gas supply.

In the event of an LPG fire and only when safe to do so, first close the regulator valve OFF and then use a dry powder extinguisher to put out the fire. This is because if a fire is extinguished before the regulator valve is closed OFF, then an explosion hazard condition could be created.

Always keep the LPG cylinder in an upright position.

LPG is a skin irritant and can cause severe cold burns similar to frostbite.

Always wear proper protective gloves when connecting to and disconnecting from a propane bottle.

Always keep LPG away from sparks, open flames, pilot lights, heat and other sources of ignition.

⚠ DANGER

NG (natural gas) and NG Vapors:

NG vapors are highly flammable and explosive.

NG vapors can cause a fire or explosion if ignited.

NG itself is odorless and tasteless. For safety, a chemical is added to give it an odor to help detect leaks quickly.

NG is lighter than air and will collect in higher areas.

If a leak is detected, IMMEDIATELY turn OFF the gas supply.

⚠ DANGER

NEVER allow any flames or smoke near the fuel system.

Wipe up any oil spills immediately.

NEVER allow any combustible materials to be near the generator or to be left in the generator compartment.

ALWAYS keep the surrounding area near the generator clean and free of debris.

Be sure to properly purge the fuel lines and leak-test according to applicable codes before placing the generator in service.

Be sure to regularly inspect the fuel system for leaks. For safety, a chemical is added to Propane/LPG/NG to give it an odor to help detect leaks quickly. Never operate the generator if a fuel leak is present.

Install a fire extinguisher near the generator. Keep it properly charged and be familiar with its use. An ABC rated National Fire Protection extinguisher is appropriate for use on standby electric systems. Contact your local fire department with any questions concerning the fire extinguisher.

⚠ DANGER

NEVER place a gasoline container, gasoline tank, LPG cylinder or any combustible material in the path of the exhaust stream during operation of the generator.

⚠ WARNING

Never use a remote or external fuel supply tank or flexible fuel hose, or any other fuel component that is broken, cut, torn or damaged.

Burn Hazards

⚠ WARNING

DO NOT touch hot surfaces.

ALWAYS avoid contact with hot exhaust components and gases. Running engines produce heat. Severe burns can occur on contact.

ALWAYS allow hot surfaces to cool to the touch.

Entanglement Hazards

⚠ WARNING

Use extreme caution when near rotating parts. Rotating parts can entangle hands, feet, hair, clothing and/or accessories. Traumatic amputation or severe laceration can result.

Keep hands and feet away from rotating parts.

Tie up long hair and remove jewelry.

Operate equipment with guards in place.

DO NOT wear loose-fitting clothing, dangling drawstrings or items that could become caught.

Battery Hazards

⚠ WARNING



Always read and comply with the battery manufacturer's recommendations for procedures concerning proper battery use and maintenance.



Batteries contain sulfuric acid and generate explosive mixtures of hydrogen and oxygen gases. Keep any device that may cause sparks or flames away from the battery to prevent explosion.



Always wear protective glasses or goggles and protective clothing when working with batteries. Always follow the battery manufacturer's instructions on safety, maintenance and installation procedures.

Safety Symbols

Some of the following symbols may be used on this product. Please study them and learn their meaning. Proper interpretation of these symbols will allow you to more safely operate the product.

SYMBOL	MEANING
	Read Operator's Manual. To reduce the risk of injury, user must read and understand operator's manual before using this product.
	Eye protection. Always wear eye protection with side shields marked to comply with ANSI Z87.1
	Wear personal protective equipment
	Safety alert symbol
	Asphyxiation hazard
	Electrical shock hazard
	Entanglement hazard
	Fire hazard
	Fire/Explosion. Fuel and its vapors are extremely flammable and explosive. Fire or explosion can cause severe burns or death.
	Hot Surface. To reduce the risk of injury or damage, avoid contact with any hot surface.

SYMBOL	MEANING
	Sever hazard (rotating blade)
	Crush hazard (top)
	Explosion Hazard. Battery gases are explosive. Keep sparks and flames away from the battery compartment.

SAFETY LABELS AND HANG TAGS

⚠ WARNING

DO NOT operate the generator if there are missing or badly worn safety labels. Safety labels must be legible to alert personnel of safety hazards.

Replace any illegible or missing label immediately. Missing safety labels must be replaced in their original position before the generator is operated.

Labels

	LABEL	DESCRIPTION	PART NO.
A	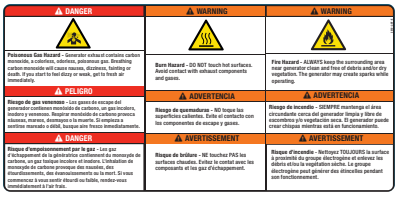	Poison, Burn and Fire Warning	2510-L-SF
B		Burn Warning	2483-L-SF
C	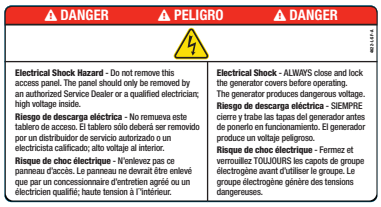	Electrocution Warning	4622-L-SF
D		Burn Warning	2473-L-SF
E	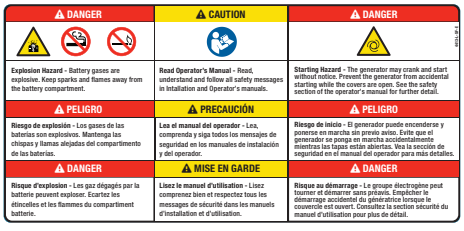	Explosion Warning, Read OM, Starting Warning	4413-L-SF
F	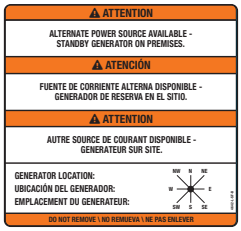	Alternate Power Source	4642-L-PR

Hang Tags

HANG TAG	DESCRIPTION	PART NO.
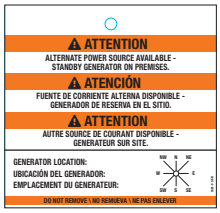	Alternate Power Source	1681-T-PR

Safety, Serial/Model, Nameplate Label Locations

The safety labels have specific placement and must be replaced if they are unreadable, damaged or missing.

If a label comes off or becomes hard to read, contact Technical Support Team for possible replacement.

A. Serial number location
B. Nameplate
C. NFPA 37 Compliance
D. Oil hang tag
E. Alternate Power Source Hang tag and Label (not shown – in the Operator's Manual bag)
F. Flexible Fuel Line Hang tag

14-kW (Model 100515)

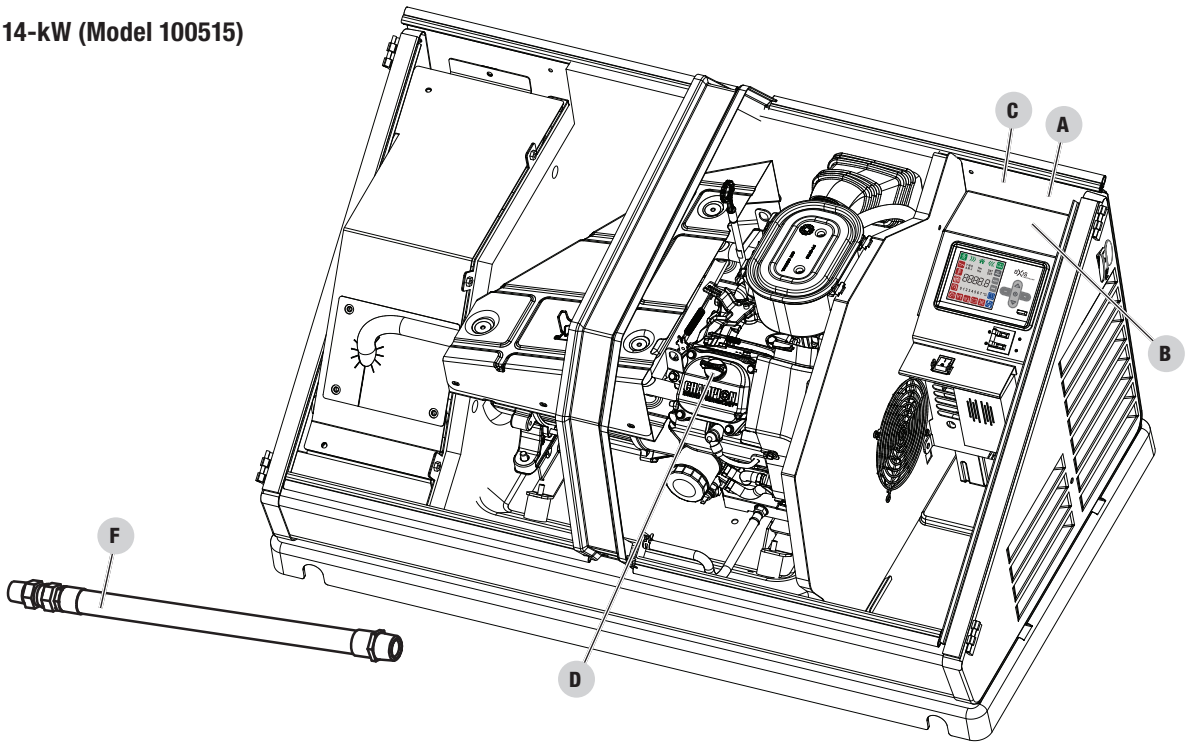

22-kW (Model 100304)

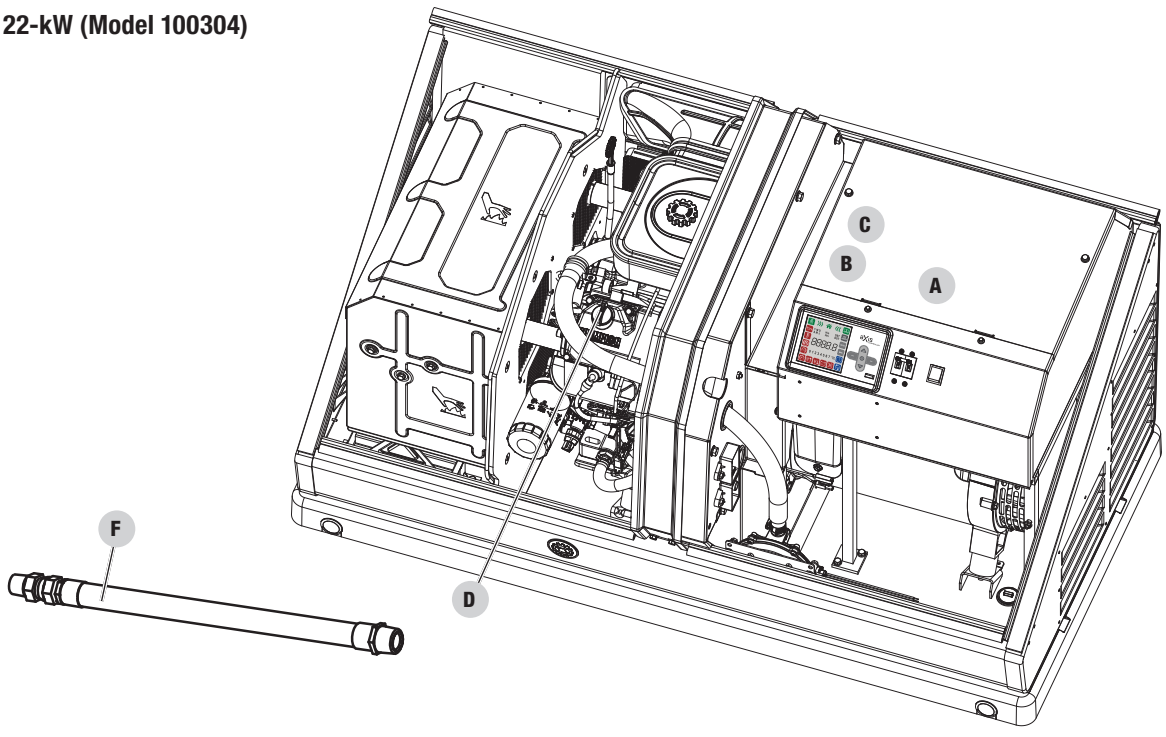

SPECIFICATIONS

14-kW (Model 100515) Specifications

Home Standby Generator	
Maximum continuous power, LPG	14 kW
Maximum continuous power, NG	12.5 kW
Rated voltage	120/240
Amps	116.6/58.3 LPG (propane), 104/52 NG (natural gas)
Harmonic distortion	Less than 5%
Main line circuit breaker	65 amp
Phase	Single
Frequency	60 Hz
Unit weight	438.7 lb. (199 kg)
Size (L x W x H)	49 x 28 x 28 in. (124.5 x 71 x 71 cm)
Engine	
Type	Milwaukee Series OHV Commercial V-Twin
No. of cylinders	2
Displacement	754 cc
Cylinder block	Aluminum with cast iron sleeves
Ignition system	Solid state – magneto
Spark plug	F7RTC (NGK BPR7ES)
Governor	Mechanical
Starter	Electric 24V DC
Oil capacity- At manufacturing	1.6 US qt (1.5 L)
Oil capacity- When draining oil and replacing oil filter	1.0 US qt (0.9 L)
Oil Type	0W-40 Full Synthetic*
RPM	3600
Controls	
Mode switch auto	Auto start on utility failure
Mode switch manual	Starts on demand
Mode switch off	Stops unit/control and charger active
Ready to run/maintenance messages	Standard
Programmable start delay	Standard
Engine start sequence	Standard
Starter lockout	Standard
Battery charger/low battery indicator	Standard
Charger fault	Standard
AVR over voltage protection	Standard
Low oil protection	Standard
Safety fused	Standard
Overcrank/overspeed/underspeed protection	Standard

Serial Number **Y2212150069+: Unit comes with oil pre-filled in unit.*
*Serial Number **< Y2212150069**: Unit does not come with oil. You must ADD OIL before starting the unit.*

After 5 hours, change oil per maintenance schedule. The recommended oil type for typical use is 0W-40 full synthetic oil. However, using the listed conventional oils shown in the "Recommended Engine Oil Type" chart may be used for typical use. If running generator in extreme temperatures, refer to the "Recommended Engine Oil Type" chart.

22-kW (Model 100304) Specifications

Home Standby Generator	
Maximum continuous power, LPG	22 kW
Maximum continuous power, NG	19.8 kW
Rated voltage	120/240
Amps	183.4/91.7 LPG (propane), 165/82.5 NG (natural gas)
Harmonic distortion	Less than 5%
Main line circuit breaker	100 amp
Phase	Single
Frequency	60 Hz
Unit weight	590.4 lb. (267.8 kg) (no battery and oil)
Size (L x W x H)	53 x 28.2 x 28.4 in. (134.7 x 71.6 x 72.1 cm)
Engine	
Type	Milwaukee Series OHV Commercial V-Twin
No. of cylinders	2
Displacement	999 cc
Cylinder block	Aluminum with cast iron sleeves
Ignition system	TCI (Transistorised Coil Ignition)
Spark plug	K7RTC (NGK BKR7ES-11)
Governor	Electronic
Starter	Electric 24V DC
Oil capacity- At manufacturing	3 US qt (2.8 L)
Oil capacity- When draining oil and replacing oil filter	2.0 US qt (1.9 L)
Oil Type	0W-40 Full Synthetic*
RPM	3600
Controls	
Mode switch auto	Auto start on utility failure
Mode switch manual	Starts on demand
Mode switch off	Stops unit/control and charger active
Ready to run/maintenance messages	Standard
Programmable start delay	Standard
Engine start sequence	Standard
Starter lockout	Standard
Battery charger/low battery indicator	Standard
Charger fault	Standard
AVR over voltage protection	Standard
Low oil protection	Standard
Safety fused	Standard
Overcrank/overspeed/underspeed protection	Standard

**After 5 hours, change oil per maintenance schedule. The recommended oil type for typical use is 0W-40 full synthetic oil. However, using the listed conventional oils shown in the "Recommended Engine Oil Type" chart may be used for typical use. If running generator in extreme temperatures, refer to the "Recommended Engine Oil Type" chart.*

14-kW (Model 100515) Engine Torque Specifications

Crankcase Cover Bolts	27 Nm (20 lbf-ft)
Connecting Rod Bolts	12 Nm (9 lbf-ft)
Rocker Cover Screws	10 Nm (7 lbf-ft)
Cylinder Head Bolts	40 Nm (29.5 lbf-ft)
Intake Manifold Screws	9.5 Nm (7 lbf-ft)
Carburetor to Intake Manifold	9.5 Nm (7 lbf-ft)
Blower Housing	9 Nm (6.6 lbf-ft)
Flywheel Nut	196 Nm (145 lbf-ft)
Ignition Coil Bolts	9.5 Nm (7 lbf-ft)
Starter Motor Bolts	24.4 Nm (18 lbf-ft)
Spark Plug	18 Nm (13.3 lbf-ft)
Air Cleaner box to Carb	9 Nm (6.6 lbf-ft)
Exhaust pipe nuts	18 Nm (13.3 lbf-ft)

22-kW (Model 100304) Engine Torque Specifications

Crankcase Cover Bolts	24 Nm (17.8 lbf-ft)
Connecting Rod Bolts	16 Nm (12 lbf-ft)
Rocker Cover Screws	15 Nm (11 lbf-ft)
Cylinder Head Bolts	40 Nm (29.5 lbf-ft)
Intake Manifold Screws	24 Nm (17.8 lbf-ft)
Carburetor to Intake Manifold	10 Nm (7.4 lbf-ft)
Blower Housing	10 Nm (7.4lbf-ft)
Flywheel Nut	28 Nm (20.7 lbf-ft)
Ignition Coil Bolts	10 Nm (7.4 lbf-ft)
Starter Motor Bolts	24 Nm (17.8 lbf-ft)
Spark Plug	18 Nm (13.3 lbf-ft)
Air Cleaner box to Carb	10 Nm (7.4 lbf-ft)
Exhaust pipe nuts	22 Nm (16.3 lbf-ft)

Master Mixing Assembly Jets (Carburetor System) - Both models

Idle/low-speed Jet	1.9 Nm (1.4 lbf-ft)
Main Jet	3.9 Nm (2.9 lbf-ft)
Fuel Inlet Chamber Screws	2.9 Nm (2.1 lbf-ft)

Alternator Overview

The alternator is made up with the following major components;

1. Brush holder assembly
2. Rear bearing carrier
3. 2 pole rotor (all copper wire)
4. Stator assembly (all copper wire)
5. Engine adapter

ROTOR ASSEMBLY

The alternator has a 2-pole rotor, which means the rotor has a single south magnetic pole and a single north magnetic pole. As the rotor spins, its magnetic field passes through the stator assembly windings and voltage is induced into the stator windings. This is known as induction. The rotor shaft has a negative (-) slip ring and a positive (+) slip ring, with the negative (-) nearest the bearing carrier. The rotor shaft is held in place with single through bolt.

STATOR ASSEMBLY

The stator houses, AC power windings and excitation windings. It is held in place with 4 bolts that pass through the bearing carrier and engine adapter, then attached to the engine mounting flange. In combination with the rotor assembly, they generate the electrical out-put of the HSB.

BRUSH HOLDER AND BRUSHES

The brush holder is a component that holds the brushes in a stationary position enabling them to maintain contact with the rotating surface commutator rings on the rotor. The brush holder is attached to the rear bearing carrier by means of a M5 x 20 bolt and a location tab. A negative (-) brush and a positive (+) brush are retained in the brush holder. The negative (-) brush rides on the slip ring nearest the bearing carrier. The brushes are spring loaded to maintain contact.

A RED wire connects to the positive (+) brush and a BLACK wire to the negative (-) brush. Rectified and regulated excitation current, as well as current from the field boost circuit, are delivered to the rotor windings via the RED wire, and the positive (+) brush and slip ring. The excitation and field boost current passes through the windings and to the frame ground via the negative (-) slip ring and brush, and the BLACK wire.

The current flow creates a magnetic field around the rotor having a flux concentration that is proportional to the amount of current flow.

UNPACKING

⚠ WARNING

The HSB weighs more than 500 lbs. (227 kg).
Use the aid of additional assistants and exercise caution during installation.

Inspect the generator for damaged or loose parts. DO NOT operate the generator if any components are damaged or loose. Contact your dealer for assistance.

1. Cut banding straps.
2. Remove top lid.
3. Remove center cardboard supporting rib.
4. Lift cardboard housing and set aside.
5. Remove plastic covering and set aside.
6. Remove 4 securing clamps. Save if going to use anchor bolts to secure to concrete pad (not supplied).
7. Insert 2 lifting rods (not supplied) into lifting holes at each end of the base.
8. Discard all shipping materials and recycle if possible.

NOTICE

If you know the length of run for wires you may want to install the ATS voltage wires now before setting unit to industry 17.7 in. from fire rated wall and when code permits. Also, install the wires, some of the gas delivery pipes and flex hose now while you have ample room at tailgate height before the generator is put in its permanent location. Use cardboard when kneeling.

INSTALLATION

Placement & Installation Guidelines for Champion Home Standby Generators to Reduce the Risk of Fire

NATIONAL FIRE PROTECTION ASSOCIATION (NFPA) STANDARD NFPA 37 REQUIREMENTS AND TESTING

Requirements:

NFPA 37 2010, section 4.1.4, Engines Located Outdoors.

Engines, and their weatherproof housings if provided, that are installed outdoors shall be located at least 1.5 m (5 ft.) from openings in walls and at least 1.5 m (5 ft.) from structures having combustible walls. A minimum separation shall not be required where either of the following conditions exist:

1. The adjacent wall of the structure has a fire resistance rating of at least 1 hour.
2. The weatherproof enclosure is constructed of noncombustible materials and has been demonstrated that a fire within the enclosure will not ignite combustible materials outside the enclosure.

Annex A Explanatory Material

A.4.1.2 (2) Means of demonstrating compliance are by means of full-scale fire tests or by calculating procedures, such as those given in NFPA 555, Guide on Methods for Evaluating Potential for Room Flashover.

To comply with condition 2 the weatherproof enclosure has been constructed of non-combustible materials and full-scale fire tests have been performed to demonstrate that a fire within the enclosure will not ignite combustible materials outside the enclosure.

Based on this testing and the requirements of NFPA 37, Sec. 4.1.4, the guidelines for installation of the Champion home standby generator are changed to 17.7 inches (45 cm) from the backside of the generator to a combustible wall. All other location and distances remain the same as noted in the Operators and Installation manuals.

These guidelines are based upon fire testing of the generator enclosure and Champion's requirement for air flow for proper operation. Local codes may be different and more restrictive.

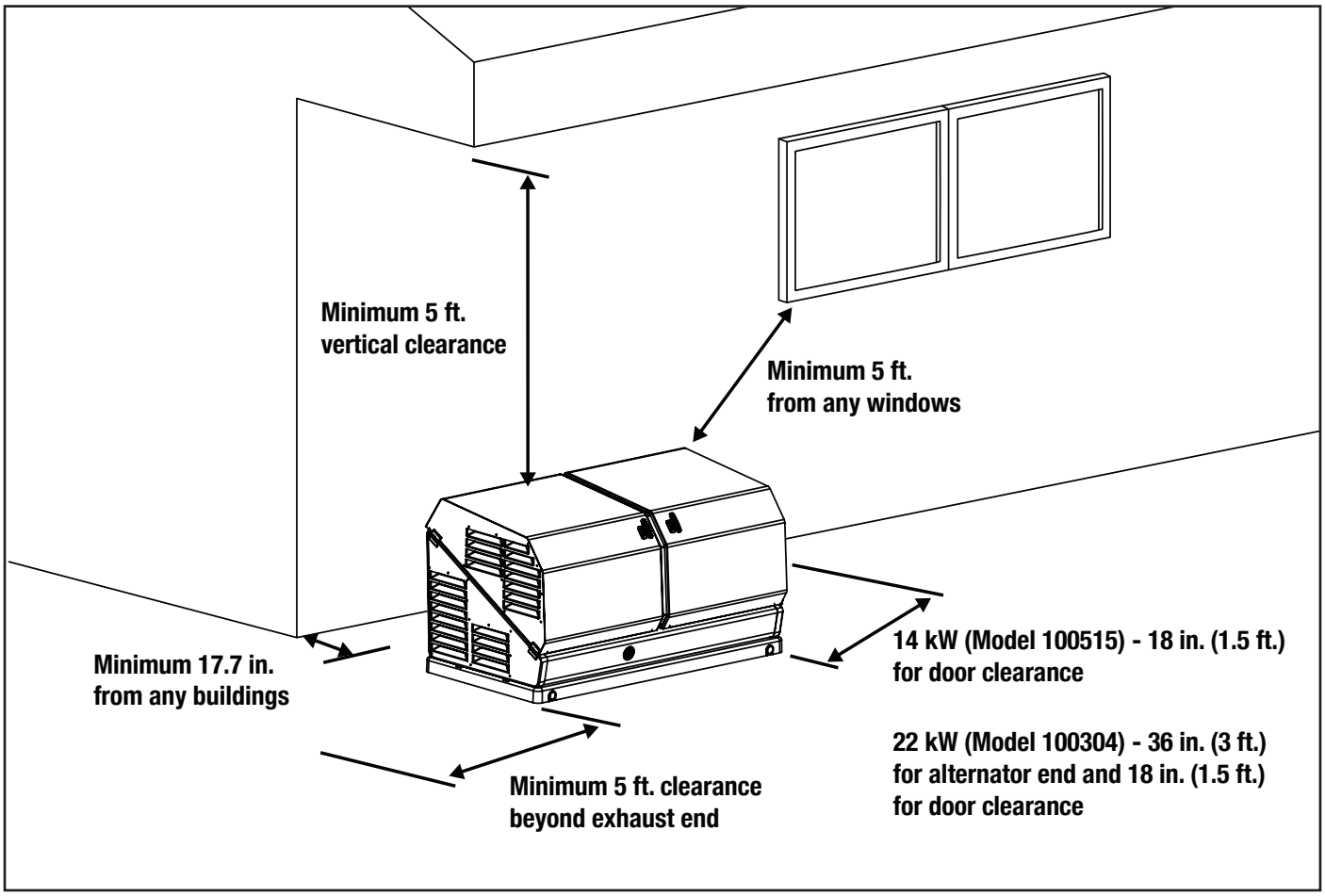

Intertek Group PLC Label

Located inside the generator, near the serial number or nameplate label.

14-kW (Model 100515)



22-kW (Model 100304)



NFPA® 37 Standard for the Installation and Use of Stationary Combustion Engines and Gas Turbine

The National Fire Protection Association (NFPA) standard NFPA 37 establishes criteria for minimizing the hazard of fire during the installation and operation of stationary combustion engines. NFPA 37 limits the spacing of an enclosed generator from openings in walls, structures and combustible materials outside the enclosure.

NFPA 37 (2015): Section 4.1.4 stipulates that engines installed outdoors shall be located at least 5 ft. (1.5 m) from structures having combustible walls. Further, a minimum separation shall not be required where the following conditions exist:

All walls of the structure that are closer than 5 ft. from the engine enclosure have a fire resistance rating of at least 1 hr., or

The weatherproof engine enclosure is constructed of noncombustible materials, and it has been demonstrated that a fire within the enclosure will not ignite combustible materials outside the enclosure.

Intertek Group PLC performed a full-scale fire test under a worst-case fire scenario within the stationary generator enclosure to determine the ignitability of combustible material near the stationary generator. The enclosure is made of non-combustible materials and the results and conclusions of the test indicate that a fire within the enclosure would not pose any risk of ignition to nearby combustible materials or structures. Intertek Group PLC is certifying that this model complies with clause (2) of Section 4.1.4 of NFPA 37 when installed at a minimum distance of 450 mm (17.7 in.) from a combustible wall.

Champion HSB units have been run and tested at the factory prior to shipment. They do not require any type of break-in period.

Site Selection, Preparation and Placement

These items are important to the overall performance of the HSB generator. Many items covered in this section are not optional and are requirements under Federal, State and Local codes. As with all generators, your generator must be installed in accordance with current NFPA-37, NFPA 54, NFPA 58 and NFPA-70 standards. Contact your local electrical inspector or city hall to insure you are aware of all codes and regulations. Install the equipment in compliance with the National Electric Code (NEC). For Canada installations, refer to Canadian Electrical Code (CEC). Contact your natural gas supplier to verify that increased BTU gas demand can be handled with the existing NG meter. The same should done for LPG fueled generators. This generator in the enclosure is designed to be installed outdoors only.

Champion HSB units are run and tested at the factory prior to being shipped. They do not require any type of break-in period.

SUGGESTED SITE SELECTION

The installation of the HSB must comply strictly with NFPA 37, NFPA 54, NFPA 58 and NFPA 70 standards.

Always install your generator within 20 feet of the NG meter, the closer the better. This will reduce expensive costs of running fuel line. In some cases longer runs of fuel line, when not properly sized may cause inadequate fuel delivery. This could result in poor starting, lower outputs and diminished overall performance of the unit. The Champion HSB is shipped from the factory set up for natural gas (NG) fuel. The HSB can be converted to LPG if required. Orifices in the master mixer assembly (carburetor) MUST be changed. The LPG orifices are shipped with the unit and include installation instructions.

Install the unit in a location where the sump pump discharge, rain gutter downspouts, roof run off, landscape irrigation, natural ponding or water sprinklers will not flood the unit or spray the enclosure entering any inlet or outlet opens.

Position the unit in an area where prevailing winds will carry the exhaust gas away from any potentially occupied building or structure.

Install the unit where leaves, grass, snow, ect., will not obstruct air inlet and outlet openings. If prevailing winds cause blowing or drifting, you may consider building a windbreak, planting trees or shrubs within the guidelines and codes applicable.

Watch out for roof overhangs. Snow, ice or rain shouldn't be permitted to accumulate on the roof and then cascade onto the unit.

⚠ DANGER

Engine exhaust from the unit is hot, poisonous and dangerous.

Exhaust must be allowed to dissipate into a free air zone as listed in the applicable codes with no obstructions.

Direct the HSB exhaust away from or parallel to the building or structure. DO NOT direct the HSB exhaust toward a potentially occupied building, structure, windows, doors, ventilation intakes, soffit vents, crawl spaces, open garage doors or other openings where exhaust gas could accumulate and enter inside or be drawn into potentially occupied buildings or structures.

Install the unit on higher ground where water levels will not rise and endanger it. This unit shouldn't be operated in standing water.

DO NOT place HSB waterproof enclosure under a deck or other type of structure that may confine or restrict airflow. Operate HSB only outdoors, where adequate ventilation and air movement is available. Avoid installations under decks, inside garages or carports, in basements, along home exterior within 5 feet (1.5m) of home vent, roof overhang vents, a window that can be opened, or other such home invasion points. Use the same precautions when installing HSB at property line, close to a neighbor's home, or any building or structure that houses animals.

⚠ DANGER

Running engines give off carbon monoxide, an odorless, colorless, invisible, poison gas.

Breathing carbon monoxide will cause fatigue, headache, dizziness, vomiting and in prolonged conditions, even death. Carbon monoxide detectors MUST be installed and maintained indoors according to the manufacturer's instructions/ recommendations. Smoke alarms cannot detect carbon monoxide gas.

The back of the HSB locates the fuel and wire entry points. When placement/mounting is done this side generally faces the closest point to each of those sources.

It is always recommended to prepare a drawing showing location of HSB, typical gas utility approach, circuit connections and full load connections.

Similar considerations should be given to the location of the ATS (automatic transfer switch) in relationship to the HSB generator. The closer to both the fuel meter and the main utility panel the better. The key point here is, the closer to fuel meter is the suggested direction to go, wire is cheaper to run and more flexible.

SUGGESTED PREPARATION

A concrete pad can be poured or purchased through Champion and the HSB secured to it. In some areas a concrete pad is required due to high wind potential. Check local codes to see what type of mounting base is required. If a concrete pad is required, all federal, state and local codes should be followed. Unless mandated by federal, state or local code, a concrete pad is not required.

22-KW (MODEL 100304)

1. Below template is found on the inside top cover of your home standby to help assist you in 1:1 drilling your own holes into your concrete pad if you are not choosing the approved pad.
2. **This template shows the outline of the plastic base on your home standby.**
3. The bolts and washers which tie your home standby to the concrete pad are included for the approved pad only. If you choose your own hardware, they must meet hurricane ratings and fit into the home standby properly. Pay attention to proper torque values noted.

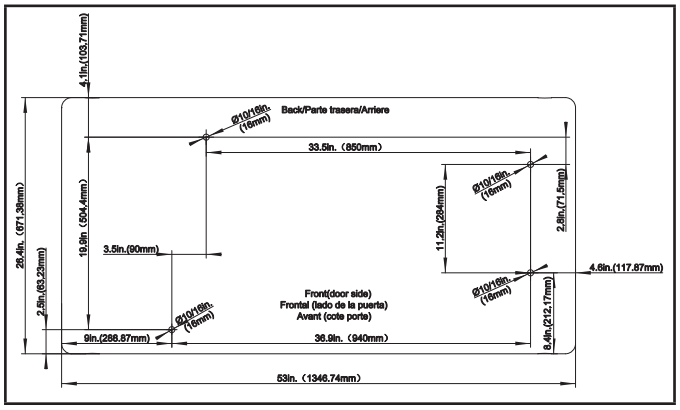

Front

1. Open left door, access hurricane bushing near front muffler side as shown. Remove bushing cap, and install washer and bolt as shown. Bolt and washer will tighten inside the hurricane bushing below the home standby pan. Torque to 3.2 Nm (2.4 lbf-ft) or hand tight and ⅛ turn more.

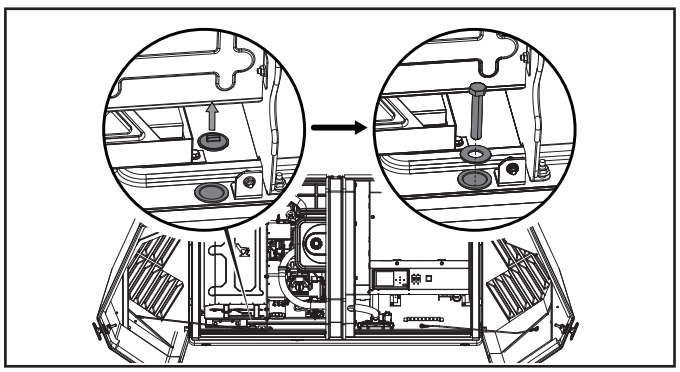

2. Open right door, access hurricane bushing near front alternator side as shown. Remove bushing cap, and install washer and bolt as shown. Bolt and washer will tighten inside the hurricane bushing below the home standby pan. Torque to 3.2 Nm (2.4 lbf-ft) or hand tight and ⅛ turn more.

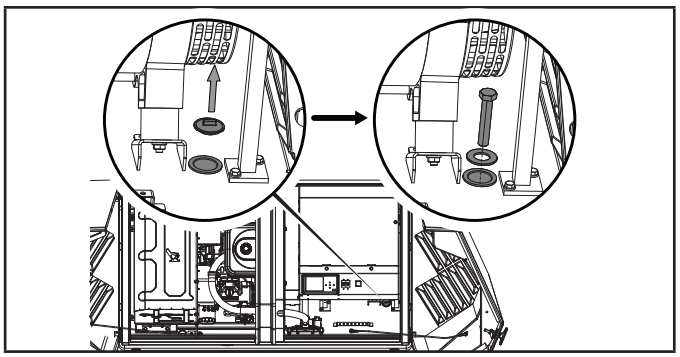

Back

3. From the front side, underneath the alternator, remove bushing cap, and install washer and bolt as shown. Lineart shows visual through the back housing. Remove bushing cap, and install washer and bolt as shown. Bolt and washer will tighten inside the hurricane bushing below the home standby pan. Torque to 3.2 Nm (2.4 lbf-ft) or hand tight and ⅛ turn more.

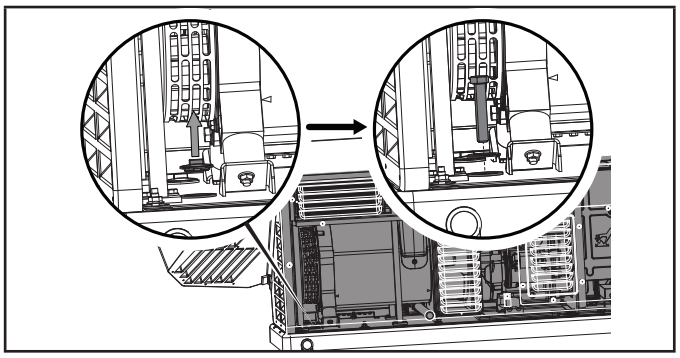

4. From the back side, through the access panel, access hurricane bushing near back muffler side as shown. Remove bushing cap, and install washer and bolt as shown. Bolt and washer will tighten inside the hurricane bushing below the home standby pan. Torque to 3.2 Nm (2.4 lbf-ft) or hand tight and ⅛ turn more.

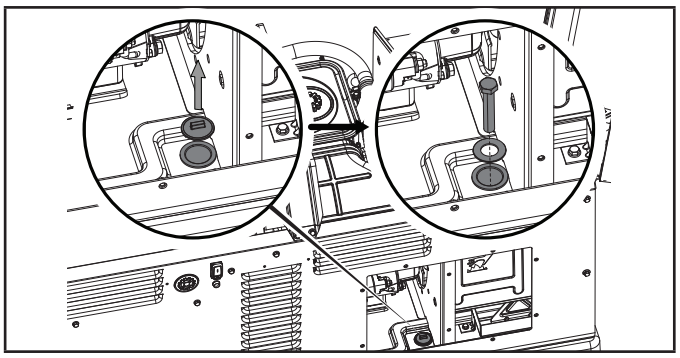

If no concrete pad is being used, Champion recommends using a mixture of pea gravel and sand or crushed stone for placement of the mounting pad. The mounting pad MUST be level. The gravel mixture or crushed stone is to permit water runoff, drainage and reduce ponding of water around the HSB.

Dig an area 5 inches (12.7 cm) deep that is 6 inches (15.2 cm) longer and wider than the foot print of the HSB. See Specifications section for L x W dimensions.

Cover the dugout area with a weed barrier or landscape cloth if desired.

Fill the area with pea gravel and sand mixture or crushed stone. Final stone level must be 2 or 3 inches (5.1 or 7.6 cm) higher than the original ground level to ensure water run-off and drainage.

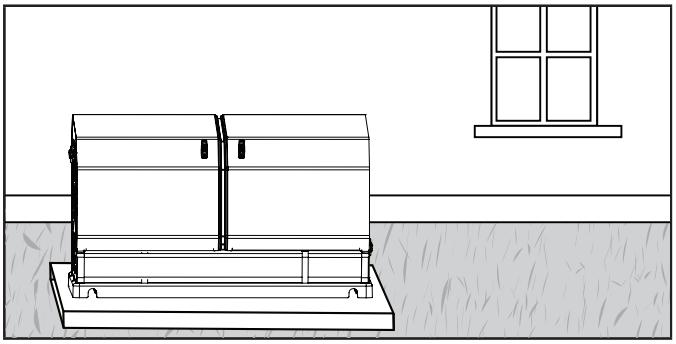

Compact the fill, this is to provide a firm base for the HSB. Remember the final stone level must be 2 or 3 inches (5.1 or 7.6 cm) higher than the original ground level to ensure water run-off and drainage.

Tools required

1. General SAE and Metric hand tools, wrenches, sockets and screwdrivers.
2. Standard electrician's hand tools, drill and bits.
3. Monometer (for checking fuel pressures).
4. Meter capable of measuring AC/DC Voltage and Frequency
5. Safety apparel

Inspect the unit. Carefully inspect the HSB for any damage that may have occurred during shipment and delivery. If loss or damage is noted at the time of delivery, have the person(s) making delivery note all damage on the freight bill and affix their signature under the consignor's memo of loss or damage. If loss or damage is noted after delivery, separate the damaged materials and contact the carrier for claims procedures. Parts damaged in shipping are not covered under Champion warranty.

Unbox the unit, by removing the exterior shipping carton. The ATS is included, remove the packaging and lift it out. Remove the 4 shipping brackets, 2 on each end that hold the HSB to the wood shipping pallet. This pallet is for shipping/transportation only and cannot be used as a mounting pad in any form. Exercise caution when removing the HSB from the wood pallet, dragging it off the wood pallet will damage the HSB base. The HSB must be lifted from the wood pallet to separate.

Contact your natural gas (NG) supplier about the meter size. Most meters must be replaced with a larger BTU size, due to a larger demand of BTU's from the HSB and appliances during operation (utility outage). This also applies to HSB utilizing LPG.

SUGGESTED PLACEMENT

⚠ WARNING

HSBs weigh approximately 300-500 lbs (136-227 kg) depending on the model. Proper tools, equipment and qualified personnel should be used in all phases of handling and moving the HSB. Do not lift or move the HSB without assistance. Do not lift the unit by the roof structure or any other enclosure component as damage to the HSB may occur, including possible injury of persons when handling and or moving the HSB in this manner.

The Site Selection has been completed, all federal, state and local codes have been reviewed and applied as mandated by the NFPA standards and all other related codes/standards.

Preparation has been completed and everything has been properly prepared to place the HSB.

The rear right side of the HSB locates the fuel (A) and electrical (B) entry points. When placement is done this side generally faces the closest point to each of those sources for fuel and electrical entry.

14-kW (Model 100515)

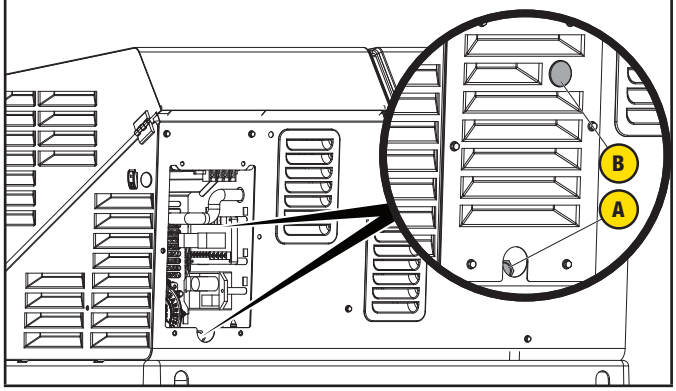

22-kW (Model 100304)

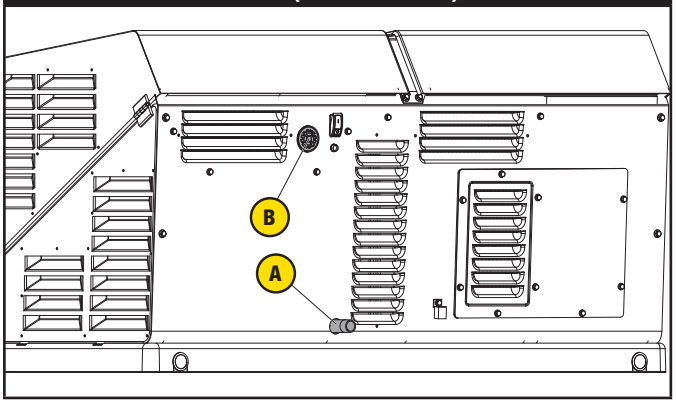

Two (2) 5 feet (1.5 m) lengths of 3/4 inch (1.9 cm) steel pipe (supplied by the installer), are required to lift the HSB. Insert the steel pipes through the lifting holes located near the HSB base in the composite pad, on each end.

14-kW (Model 100515)

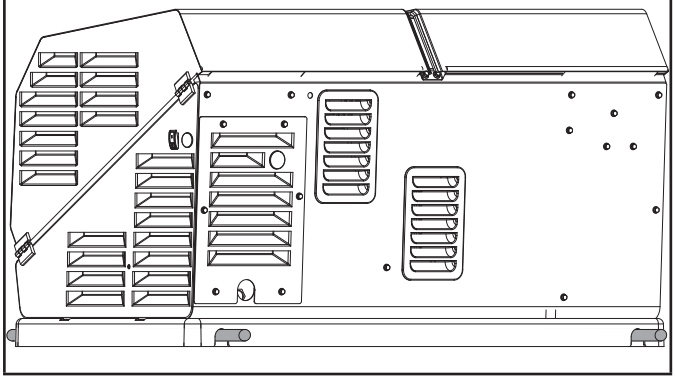

22-kW (Model 100304)

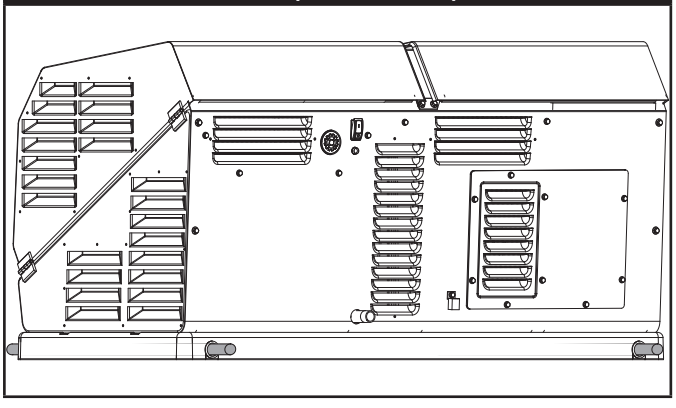

You may also lift the HSB using a properly rated strap, lift, hook and hoist procedure attached to both steel lifting pipes, provided that you use spreader bars to ensure that the belts, chains or cables DO NOT touch/contact the HSB.

Once the HSB has been placed, check to make sure it is level. If it isn't, make adjustments prior to installation procedures start.

Installation Preparation

⚠ WARNING

Improper installation can result in personal injury and damage to the generator. It may also result in the warranty being suspended or voided. All the instructions must be followed including location clearances and pipe size.

Once Site Selection, Preparation and Placement has been completed, you can proceed to Installation Preparation. Without these in place you may encounter problems moving forward.

There are a number of key items that MUST be addressed prior to the physical installation of the HSB. The installation of the HSB must comply strictly with all applicable codes, standards and regulations (NFPA 37, NFPA 54, NFPA 58, and NFPA 70).

Check and confirm that the aXis Controller® is in the "OFF" position. It is recommended to pull the control module fuse located on the front panel and turn the circuit breaker to the OFF position.

Champion HSB units have been run and tested at the factory prior to being shipped. They do not require any type of break-in period.

⚠ CAUTION

Check oil level, add oil if required. Add oil to full capacity as stated in the specification section before starting the HSB.

Never operate the HSB with the engine oil level below the "ADD" mark on the dipstick, doing so could damage the engine. Check the oil level and add the appropriate viscosity and amount indicated on the oil dipstick full line. The recommended oil type for typical use is 0W-40 full synthetic oil.

The following will be covered;

1. Fuel Requirements and Recommendations
2. Fuel Consumption
3. NG Pipe Sizing, flexible fuel line
4. LPG Vapor Pipe Sizing, flexible fuel line
5. Converting to LPG
6. Full Flow Shut Off Valve
7. Sediment Trap
8. Checking Pressure with a Manometer
9. Battery Requirements, Installation & Service

10. Wiring of the HSB

1. FUEL REQUIREMENTS AND RECOMMENDATIONS

The following NG and LPG fuel information is provided to assist the fuel installer. This information should not be deemed to be all inclusive or to conflict with local dry fuel codes. Consult your local fuel supplier or Fire Marshall for guidance on proper local codes and installations. Local codes will mandate correct routing of gaseous fuel line piping around gardens, shrubs and other landscaping to prevent any damage.

Special considerations should be given when installing the HSB where local conditions include might flooding, tornadoes, hurricanes, earthquakes and unstable ground. These are considerations for the flexibility and strength of piping and their connections.

NG is lighter than air and will collect in high areas. LPG is heavier than air and will settle in low areas.

⚠ DANGER

Gaseous fuels such as NG and LPG are highly explosive. Even the slightest spark can ignite such fuels and cause an explosion, which could cause burns, fire or explosion resulting in serious injury, property damage or even death. NO leakage is permitted.

Recommended fuels should have a BTU content of at least 1,000 BTU's per cubic foot for NG, or at least 2,500 BTU per cubic foot for LPG. Ask the fuel supplier for the BTU content of the fuel.

Before NG fuel lines plans are made, call your NG supplier, provide them information on the amount cubic feet/hour and the BTU's/hour that the HSB will use, and ask if the NG meter and primary regulator can accommodate the addition of the NG generator. NG companies have different meters for increased BTU demands. Utilize the "Fuel Consumption (BTU) Chart" contained in this manual or the Installation Manual for your specific HSB model.

Verify that the current gas meter is capable of providing enough fuel flow to include household appliances and other loads including the addition of the HSB. Check the NG primary regulator, connected at the NG meter output. The correct primary regulator is set at 5 to 7 inches water column. The existing primary regulator may be undersized once the HSB is added.

The HSB engine can run on either NG or LPG. The HSB comes equipped from the factory to run on NG. If your installation requires the engine to run on LPG, orifices in the master mixer assembly (carburetor) MUST be changed. The LPG orifices are shipped with HSB. Refer to "Converting to LPG" in this manual or the "Installation Manual" for your specific HSB model.

Fuel System Requirements

14-kW (Model 100515)		
Fuel System Requirements	**LPG**	**NG**
Fuel Supply Inlet	3/4 in. NPT	
Fuel Supply Pressure	10 – 12 inch-H20 (2.5 – 3.0 kPa W.C.)	5 – 7 inch-H20 (1.2 – 1.7 kPa W.C.)
Maximum flow rate @ 14kW	10.1 l/hr	5.3 m^3/hr

Nominal Fuel Rating	
LPG	2500 BTU/ft^3
NG	1000 BTU/ft^3

22-kW (Model 100304)		
Fuel System Requirements	**LPG**	**NG**
Fuel Supply Inlet	3/4 in. NPT	
Fuel Supply Pressure	10 – 12 inch-H20. (2.5 – 3.0 kPa W.C.)	5 – 7 inch-H20 (1.2 – 1.7 kPa W.C.)
Maximum flow rate @ 22kW	13.7 l/hr	7.7 m^3/hr

Nominal Fuel Rating	
LPG	2500 BTU/ft^3
NG	1000 BTU/ft^3

Install the fuel system in accordance with NEC and local codes. The HSB is EPA Phase 3 certified for LPG and NG fuels.

2. FUEL CONSUMPTION

Air density is less at high altitudes, resulting in less available engine power. Engine power will decrease 3.5% for each 1,000 feet (300 m) above sea level and 1% for each 10° F (5.5° C) above 77° F (25° C). Make sure these factors are considered when determining total HSB load.

The gas supply and pipe MUST be sized at 100% load BTU rating. Understand that as a specific fuel supply line pipe diameter is extended in length, its ability to carry the volume of gas diminishes in direct proportion. Improper fuel pipe sizing is the number one reason for poor operating performance (hard starting, output).

Required fuel pressure for NG is 5 – 7 inches water column. Required fuel pressure for LPG vapor is 10 – 12 inches water column. These are estimated fuel supply requirements listed. Refer to "Fuel Consumption Chart" above.

14-kW (Model 100515)				
		Consumption		
Fuel Type	Percent Load	L/hr	gal/hr	BTU/hr
LPG	0%	3.1	0.8	74,729
	50%	5.9	1.6	143,412
	100%	9.9	2.6	239,665
		m^3/hr	ft^3/hr	BTU/hr
NG	0%	1.8	63.6	63,566
	50%	3.3	116.5	116,538
	100%	5.1	180.1	180,105

22-kW (Model 100304)				
		Consumption		
Fuel Type	Percent Load	L/hr	gal/hr	BTU/hr
LPG	0%	6.1	1.6	147,765
	50%	7.6	2.0	182,590
	100%	13.7	3.6	332,048
		m^3/hr	ft^3/hr	BTU/hr
NG	0%	3.8	134.5	134,549
	50%	4.9	173.4	173,395
	100%	7.7	270.2	270,157

3. NG PIPE SIZING

The HSB leaves the factory set up for NG, no changes or alteration need to be made if NG is the fuel source you are going to use The following NG fuel information is provided to assist the fuel installer. This information should not be deemed to be all inclusive or to conflict with local dry fuel codes. Consult your local fuel supplier or Fire Marshall for guidance on proper local codes and installations. All piping must comply with NFPA 54 and related codes. Gas line connections should be made by a certified plumber familiar with local codes.

Always use AGA approved gas pipe and a quality pipe sealant or joint compound. The piping should conform to federal and local codes, rigidly mounted and protected from vibration. Piping should be black iron or steel to avoid reacting with the sulfur in the fuel.

⚠ DANGER

NG is highly explosive. Even the slightest spark can ignite and cause an explosion, which could cause burns, fire or explosion resulting in serious injury, property damage or even death. NO leakage is permitted. Safety is important.

Gas pipe sizing is critical to the proper operation of the HSB. The HSB fuel inlet size has no bearing on the proper gas pipe size running to the HSB. Gas supply and pipe MUST be sized at 100% load BTU rating. Understand that as a specific fuel supply line pipe diameter is extended in length, its ability to carry the volume of gas is diminished in direct proportion.

Pipe sizes are measured by inside diameter (ID) to include any fittings, valves, elbows, tees or angles. Add 2.5 feet (.76 m) per bend, tee or angle in the pipe line to the overall distance, for each 90 degree elbow, add 8 feet (2.4 m) to the measurement. Use a pipe sealant or joint compound approved for use with LPG/NG on all threaded fittings to assure zero leakage.

A dedicated NG fuel supply line pipe and primary gas regulator is mandatory for proper operation. A minimum of one (1) approved, external manual full flow shutoff gas valve must be installed in the fuel supply line pipe leading to the HSB. This line must be easily accessible.

FLEXIBLE FUEL LINE

A flexible fuel line (1) is to be installed between the stationary fuel supply line pipe and the fuel inlet pipe to the HSB. This flexible fuel line is included with the HSB. The purpose of the flexible fuel line is to ensure that vibration from the HSB does not cause a gas leak at one of the connection points. The flexible fuel line is not to be installed underground, in contact with any enclosure parts or contact with the ground. The entire flexible fuel line must be visible for periodic inspection and must not be concealed within nor contact nor run through any wall, floor, partition or fence. Never bend flexible fuel line to avoid using an elbow. Bending the flexible fuel line decreases its ability to absorb vibrations and could restrict the actual fuel flow. Because a HSB engine is prone to vibration, a flexible piping connection to the gas supply is required. Connect the HSB to the gas supply piping with an approved flexible gas line according to local codes. The flexible gas line also protects against settlement between the HSB pad and the ridged gas supply piping.

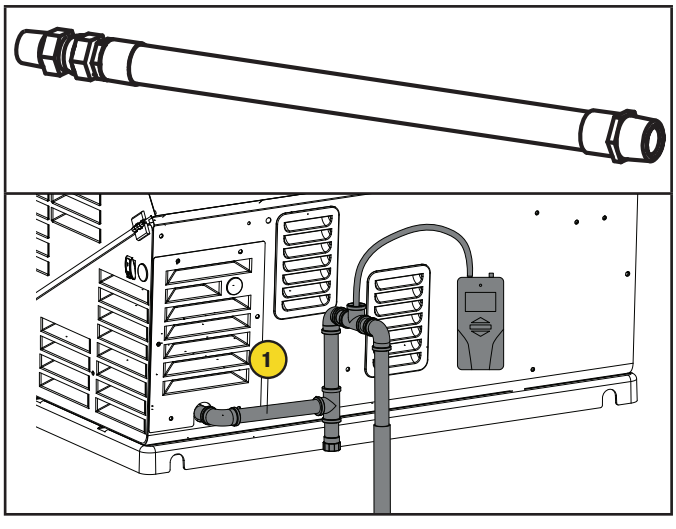

⚠ CAUTION

Check for leaks by spraying all connection points with a soap solution made of dishwashing liquid and water. If you see bubbles, this indicates a leak and the connection should be corrected. Check each connection point, there should not be a visible bubbling when soap solution applied. Installed piping must be properly purged and leak tested, in accordance with applicable codes and standards. A sediment trap should be placed in the fuel supply pipe line to drain any condensation.

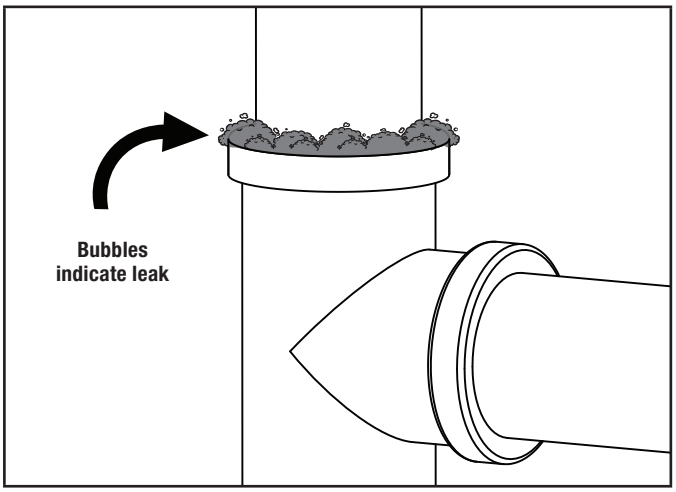

Refer to the "Fuel Pipe Sizing Chart" contained in this manual. Champion HSB units have been run and tested at the factory prior to shipment. They do not require any type of break-in period.

4. LPG VAPOR PIPE SIZING

The HSB leaves the factory set up for NG. If you are going to fuel the HSB with LPG you MUST change the Master Mixer Assembly (carburetor system) for LPG usage. The HSB will not perform on LPG if the carburetor system is not changed from NG to LPG. Refer to "Converting to LPG" in this manual. If your installation requires the engine to run on LPG, a set of orifices in the Master Mixer Assembly (carburetor system) MUST be changed for 14-kW (Model 100515). The LPG set of orifices are enclosed (shipped) with the HSB. 22-kW (Model 100304) only requires to change the entire mixer assembly jet block. The jet block is enclosed (shipped) with the HSB.

The following LPG information is provided to assist the fuel installer. This information should not be deemed to be all inclusive or to conflict with local dry fuel codes. Consult your local fuel supplier or Fire Marshall for final answers on proper local codes and installation. All piping must comply with NFPA 54 and related codes. Gas line connections should be made by a certified plumber familiar with local codes.

⚠ DANGER

LPG is highly explosive. Even the slightest spark can ignite and cause an explosion, which could cause burns or fire resulting in serious injury, property damage or even death. No leakage is permitted. Safety is important.

Gas pipe sizing is critical to the proper operation of the HSB. The HSB fuel inlet size has no bearing on the proper gas pipe size running to the HSB. Gas supply and pipe MUST be sized at 100% load Btu rating.

Pipe sizes are measured by inside diameter (ID) to include any fittings, valves, elbows, tees or angles. Add 2.5 feet (.76 m) per any bend, tee or angle in the pipe to the overall distance. For each 90 degree elbow, add 8 ft. (2.4m) to the measurement. Use a pipe sealant or joint compound for use with LPG/NG on all threaded fitting to assure zero leakage.

The LPG must be a vapor withdrawal system. The HSB will not work on a liquid withdrawal system. Gas line connections should be made by a certified plumber familiar with local codes.

New LPG tanks and existing LPG tanks already located at the installation site, have a primary fuel regulator set and intended for home heating and cooking. This regulator might not be properly sized to accommodate the addition of the HSB. Contact the local LPG supplier to properly size the fuel regulator.
Make sure the tank is sized large enough to provide the required Btu's for the HSB and all connected appliances.

The LPG fuel tank must have a dedicated primary fuel regulator mounted at the tank fuel outlet point and set for 6 ounce pressure, 10 -12 inch water column. A direct, dedicated fuel line connected directly to the HSB mounted secondary regulator, also set at 6 ounce pressure, 10 -12 inch water column. When sizing the secondary regulator for LP applications be sure to note the maximum individual load capabilities. This could impact HSB starting performance if sized to small. It is not recommended to reduce the fuel supply line pipe exiting the secondary regulator unless to accommodate the flexible fuel line required to install and shipped with the unit. The may result in starting or performance issues with the HSB.

Make sure fuel supply line pipe includes an on/off external manual full flow shut off gas valve at both the LPG tank and at the point of connection to the HSB.

A sediment trap should be installed into the fuel supply pipe line to drain any condensation.

FUEL PIPE SIZING CHART

NOTICE

Reduced pipe size will affect fuel delivery and performance.

Measure the pipe length from the generator fuel inlet to the primary gas pressure regulator.

Pipe Length*	NG	LPG
25 ft (8 m)	3/4 in. NPT	3/4 in. NPT
50 ft (15 m)	1 in. NPT	3/4 in. NPT
100 ft (30 m)	1 in. NPT	1 in. NPT
150 ft (46 m)	1-1/4 in. NPT	1 in. NPT
200 ft (61 m)	1-1/4 in. NPT	1 in. NPT

**Add 2.5 ft (0.76 m) per bend, tee or angle in the pipe line to overall distance, for each 90 degree elbow, add 8 feet (2.4 m) to the overall measurement.*

5. CONVERTING TO LPG

Jet Change Procedures - 14-kW (Model 100515)

The engine is fitted with a dual Master Mixer Assembly (carburetor system), which allows the HSB to run on either NG or LPG. It has been configured at the factory to run on NG. If your installation requires to run on LPG, orifices or jets in the Master Mixer Assembly (carburetor system) must be changed. The LPG orifices or jets are shipped with the HSB. Place a rag in the valley of the engine to prevent damaging other components from any dropped parts.

Tools Required:

- 4 mm hex bit socket or 4 mm T-Handle hex key - 4 mm allen wrench is included.
- Ratchet Wrench for bit socket
- 10mm wrench or ratchet
- Torque wrench

1. Remove breather tube (1) by loosening breather tube clamp (2).

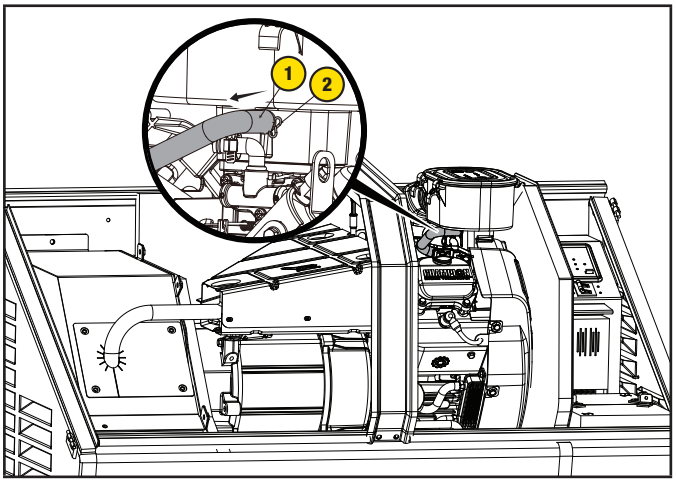

2. Remove fuel inlet chamber screws (3). Remove fuel inlet chamber (4) along with fuel hose (5) and gasket (6).

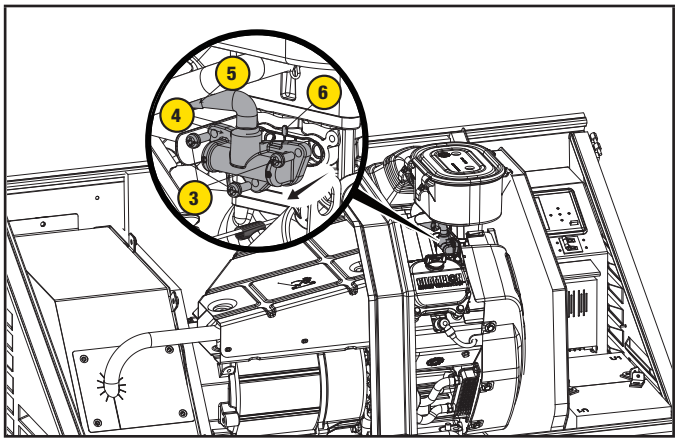

3. Remove left side main jet (7), right side main jet (8), left side slow jet (9) and right side slow jet (10). Recommend tool for removing main jet: Special Tool (Part number 100908). Recommend tool for removing slow jet: Driver Bit, 7/32 Slot - Flat Head

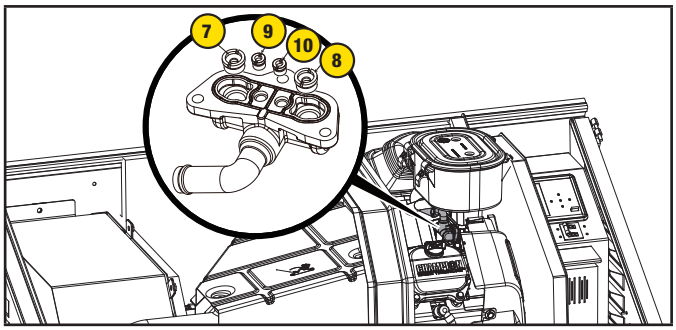

4. Install LPG jets and gasket (6) to fuel inlet chamber.

   Left side main jet: Size #410 (11)

   Right side main jet: #430 (12)

   Left side slow jet: Size #130* (13)

   Right side slow jet: #120* (14)

   Main Jet Tightening Torque: 34.7 lb.-in (3.92Nm)

   Slow Jet Tightening Torque: 17.3 lb.-in (1.96Nm)

**No slow jet required for NG.*

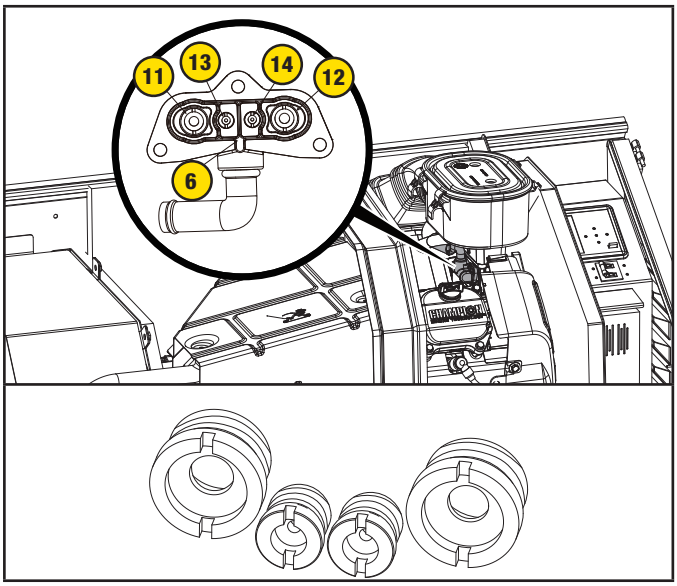

5. Install fuel inlet chamber to mixer body. Tighten fuel inlet chamber screws (3). Screw Tightening Torque: 26.0 lb.-in. (2.94Nm).

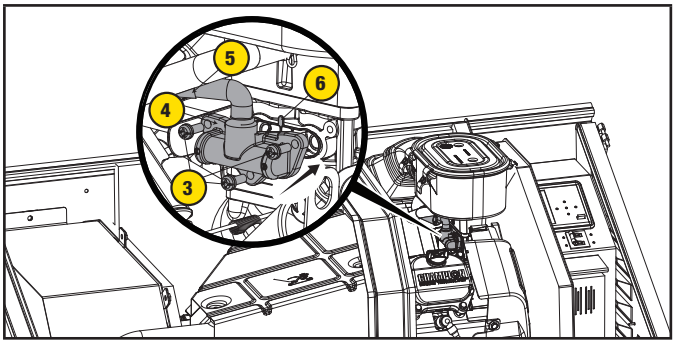

6. Connect breather tube (1) to breather port and put clamp (2) on breather tube.

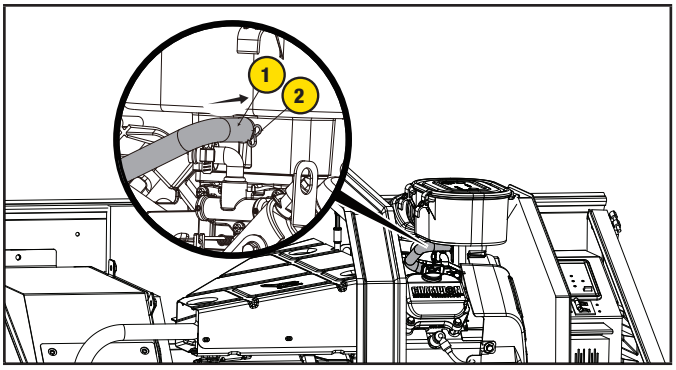

Mixer Change procedures - 22-kW (Model 100304)

The engine is fitted with a dual Master Mixer Assembly (carburetor system), which allows the HSB to run on either NG or LPG. It has been configured at the factory to run on NG. If your installation requires to run on LPG, you need to exchange the Master Mixer Assembly (carburetor system). This Master Mixer Assembly is included for LPG conversion. Place a rag in the valley of the engine to prevent damaging other components from any dropped parts.

Tools Required:

- 4 mm hex bit socket or 4 mm T-Handle hex key - 4 mm allen wrench is included.
- Ratchet Wrench for bit socket
- 10mm wrench or ratchet
- Torque wrench

1. Remove fuel hose (1) by loosening the fuel hose clamp (2).

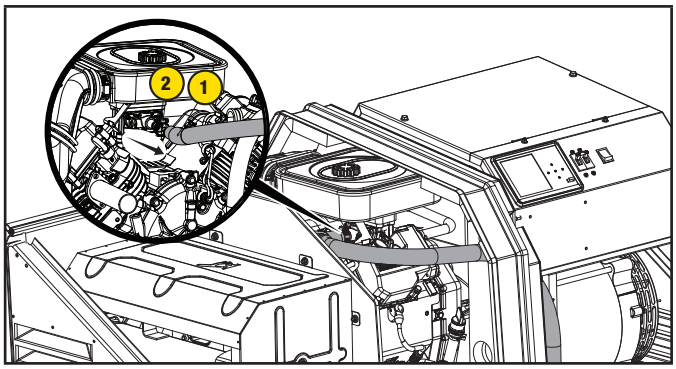

2. Remove P clamp by removing M10 bolt. This will give you easier access to remove and install the Master Mixer Assembly.

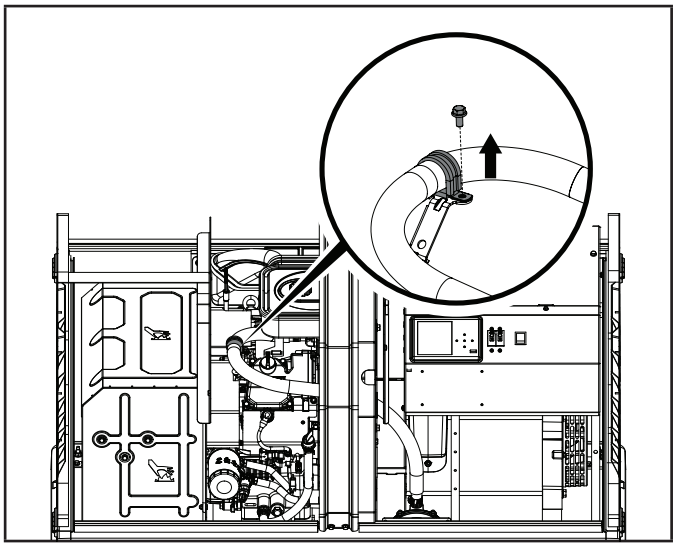

3. Remove fuel inlet chamber screws (3). Remove Master Mixer Assembly (4) along with the gasket (5).

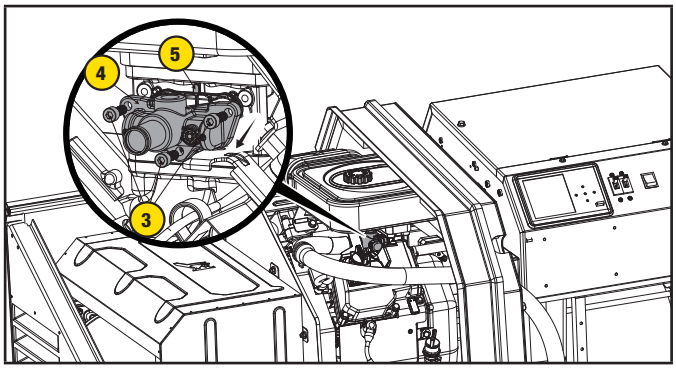

4. Install Master Mixer Assembly (4) with the green dot (this indicates LPG) to mixer body. Make sure the gasket (5) is installed on the fuel inlet chamber side. Tighten Master Mixer Assembly screws (3). Screw Tightening Torque: 26.0 lb.-in (2.94Nm).

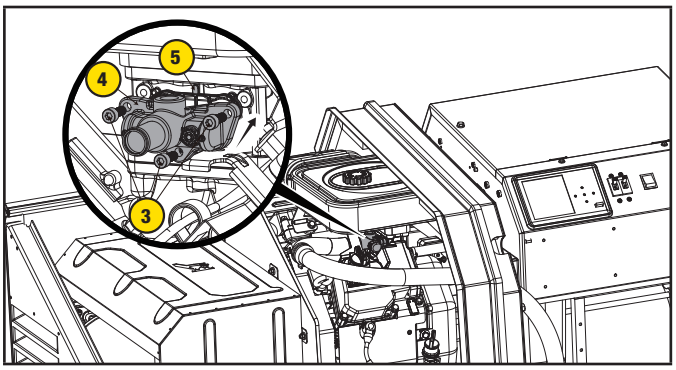

5. Connect fuel hose (1) to master mixer assembly and put clamp (2) on fuel hose.

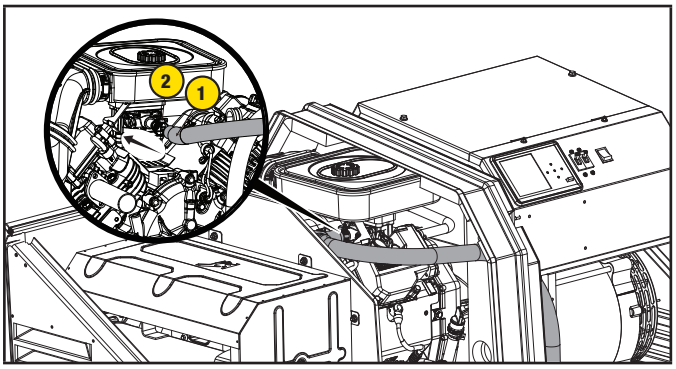

6. FULL FUEL SHUT OFF

A minimum of one accessible, approved manual full fuel shutoff valve shall be installed in the fuel supply line of the HSB. A manual full fuel shut off valve should be installed inside the building, for those locations with inside gas meters. The full flow shut off valve should be installed in accordance with all applicable codes and standards.

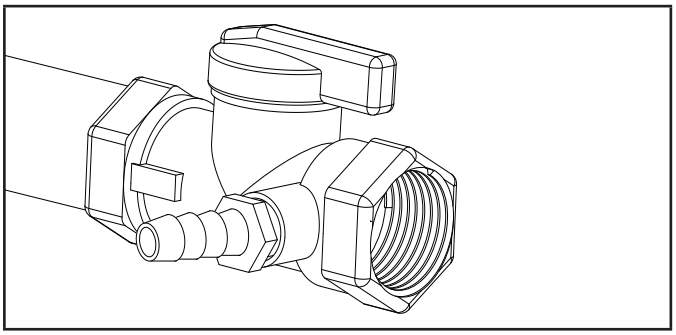

7. SEDIMENT TRAP

A sediment trap should be installed into the fuel supply line pipe when using either NG or LPG to drain any condensation. Always make sure the HSB is completely in the OFF position and the full flow fuel shut off valve is closed before removing the sediment trap for drainage. Use a pipe sealant or joint compound approved for use with LPG/NG on all threaded fittings to reduce the possibility of leakage. Install a sediment trap (1) downstream of the HSB shut-off valve as close to the inlet as possible in accordance with local codes.

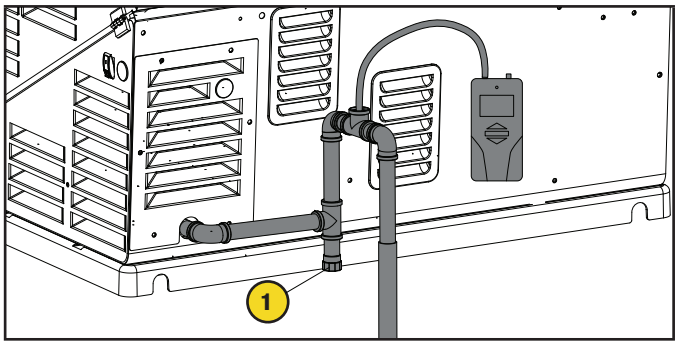

8. CHECKING PRESSURE WITH A MANOMETER

This check should only be done when the HSB and ATS have been installed, properly inspected and ready for testing.

A Manometer is a general term for any device that measures pressure. A gas manometer (1) measures gas pressure. It's important to make sure the correct amount of fuel is being delivered to the HSB when it starts and at full load usage, the Manometer provides the ability to check the fuel pressure throughout the operation of the HSB. A Manometer port should be placed in the fuel supply pipe line.

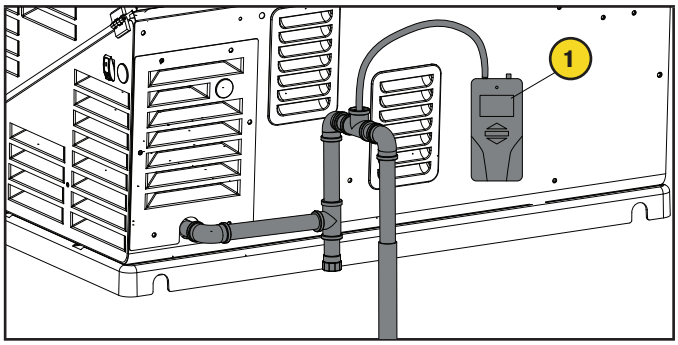

⚠ CAUTION

Remove the plug, install the Manometer. Open the gas supply valve check to make sure the pressures are within the specified values for NG or LPG. This is always a good starting point for evaluations related to poor performance.

After all appliances have been turn on, start the HSB. If the Manometer stays within 5 -7 inches of water column for NG, 10 -12 inches of water column for LP, with full load applied to a proper running HSB, the installation is good.

If the Manometer reading falls below the listed inches of water column for either specific gas rating while the HSB engine is starting or running. It may be an indication that the gas meter or primary regulator is undersized.

If the Manometer reading stays within the specific gas rated inches water column, but the HSB engine will not start, run erratic, it may indicate insufficient fuel volume due to long fuel supply pipe line, incorrect full pipe diameter. Recheck you initial calculations to ensure where the problem might exist. Champion HSB units have been run and tested at the factory. They do not require any type of break-in period.

9. BATTERY REQUIREMENTS, INSTALLATION & SERVICE

Battery sizing is a topic that is discussed and debated for a number of reasons. The battery size, cold cranking amps (CCA), starting cycle or deep cycle are all items for consideration. The following will assist you to better understand the battery, the codes and the purpose of the battery. It is extremely important to follow all cautions and warnings per the battery manufacturer concerning installation, service, maintenance and replacement procedures.

Battery Council International (BCI) is an association of battery industry companies whose members establish policy and standards for the industry.

Battery Size is the physical dimensions of a battery. BCI assigns letters and numbers for North American battery size types.

Cold Cranking Amps (CCA) is a rating that is used to define the batteries ability to start an engine under low-temperature conditions. BCI defines it as “the number of amps a lead-acid battery at 0 degrees F can deliver for 30 seconds”.

Starting (cranking) Cycle Battery is designed to deliver large bursts of power for a short time, as needed to start an engine. Starting batteries are intended to have a low depth of discharge on each use.

⚠ WARNING

The starting system is a 24-volt DC system. The two 12-volt batteries MUST be wired in series to achieve the correct voltage.

Damage will result if the battery connections are made in reverse, refer to owner manual or installation manual for typical installation. Dielectric grease should be applied on battery posts to aid in prevention of corrosion. Cables supplied with the HSB.

This HSB is equipped with an automatic float type battery trickle charger powered by utility power, to maintain full battery power while in standby (non-running) mode. This trickle charger will not recharge a fully discharged or defective battery.

When doing any work on the batteries always make sure the HSB, ATS and transfer switch from utility are in the “OFF” position or sparking may occur at the battery posts as the cables are attached and cause an explosion.

Battery Requirements

⚠ CAUTION

For battery installation, maintenance, and safety requirements refer to battery manufacturer’s battery installation and safety manual.

14-kW (Model 100515)

Two (2) 12-volt Group U1L batteries with maximum overall dimensions of 7 3/4 x 5 3/16 x 7 5/16 inches (196 x 131 x 185 mm) L x W x H. Purchase batteries locally.

The recommended battery type for typical use is 350 CCA. This is based on testing in extreme cold and heat -22° F (-30° C) to 104° F (40° C). However, a 300 CCA shown in the “Recommended Battery Type” chart may be used for typical use, if in regularly warmer climates.

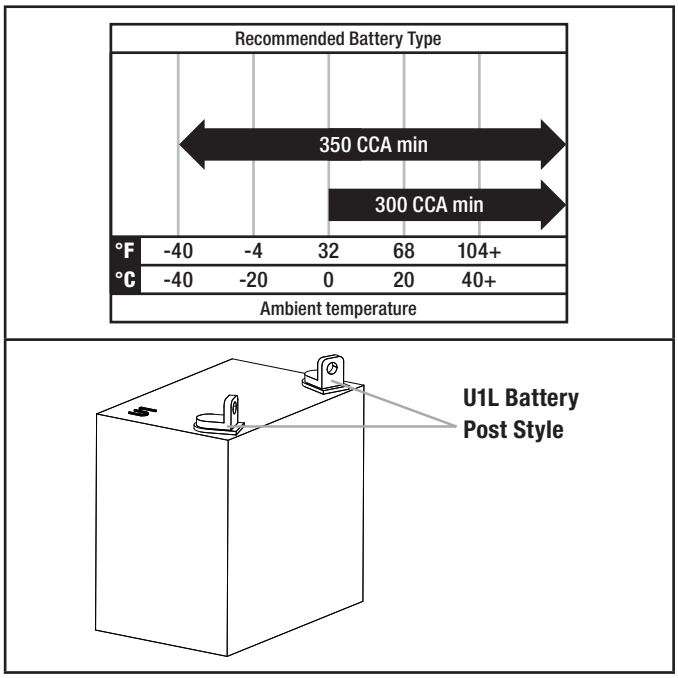

1. Place the batteries in the front right corner of the HSB enclosure. Features on the floor of the enclosure locate batteries. If replacing existing batteries, disconnect wiring and remove old batteries.

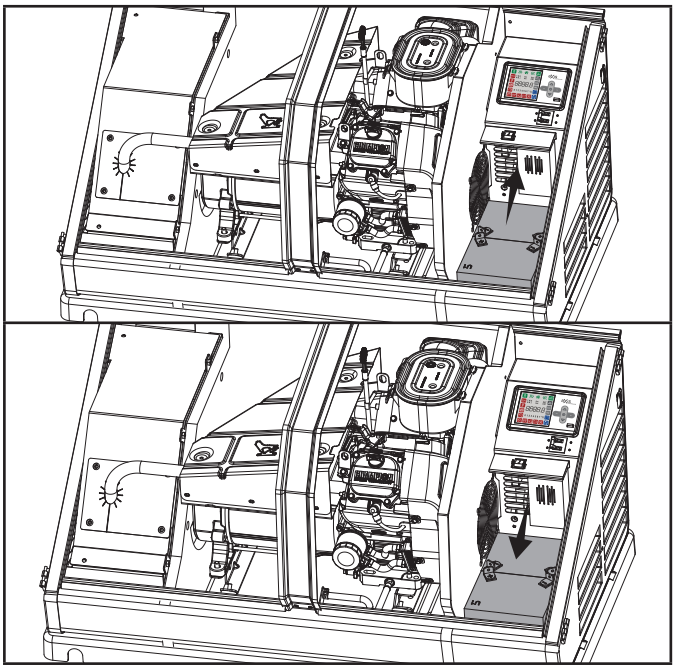

2. Install positive cable first.
3. Install the battery series cable from the positive (+) terminal of one battery to the negative (–) terminal of the other battery. Always connect the positive (+) battery cable to the generator (starter) first.

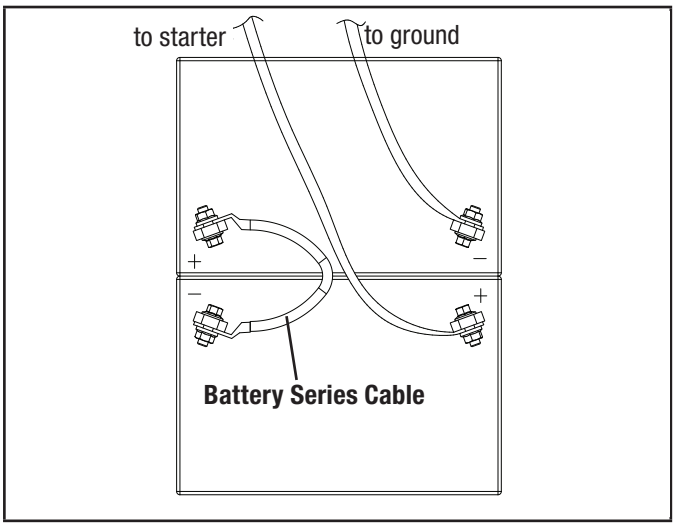

4. Dielectric grease should be applied on the battery connections to aid in the prevention of corrosion.
5. Install both battery post covers.
6. Inspect, clean or re-grease battery connections every two months.

22-kW (Model 100304)

Install two (2) 12 volt Group 26 batteries with maximum overall dimension of 8 3/16 x 6 13/16 x 7 3/4 inches (208 x 173 x 197 mm) L x W x H with an Automotive (A) post or terminal configuration. Purchase batteries locally.

The recommended battery type for typical use is 540 CCA (Cold Cranking Amps). However, a 525 CCA battery shown in the "Recommended Battery Type" chart may be used for typical use, if in regularly warmer climates.

Alternatively, you may also use two (2) 12 volt Group 26R, but both batteries must be 26R.

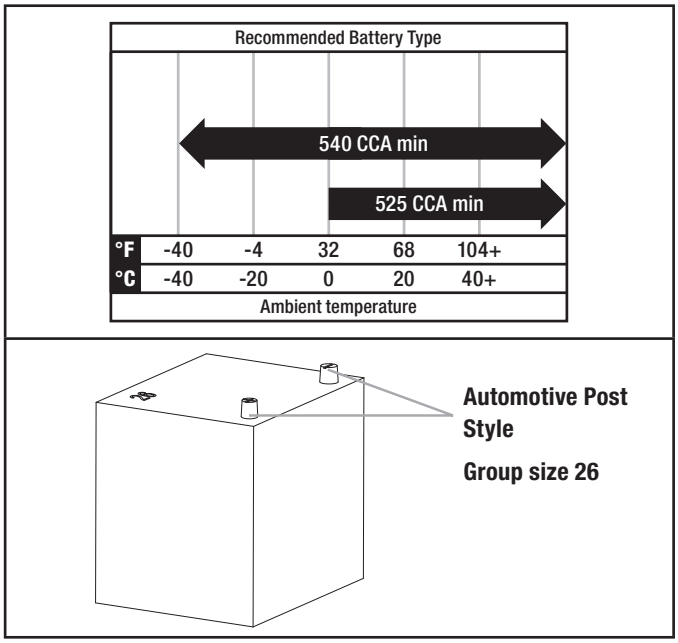

1. Place the batteries under the cover behind the aXis Controller®. Remove four M6 x 12 bolts using a 10mm wrench (not included) and place the batteries in the battery tray. If replacing existing batteries, disconnect wiring and remove old batteries.

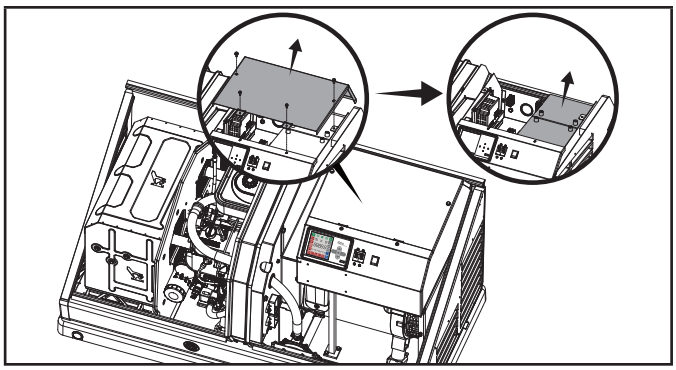

2. Install positive cable first.
3. Install the battery series cable from the positive (+) terminal of one battery to the negative (–) terminal of the other battery. Always connect the positive (+) battery cable to the generator (starter) first.

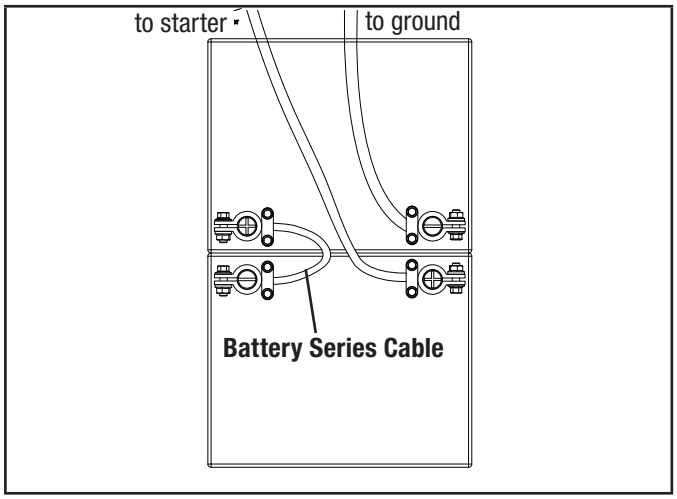

4. Dielectric grease should be applied on the battery connections to aid in the prevention of corrosion.
5. Install both battery post covers.
6. After connecting the batteries, reinstall the cover four M6 x 12 bolts using a 10mm wrench (not included).

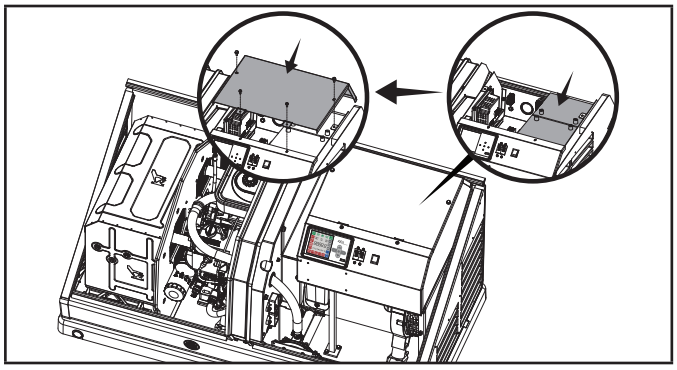

7. Inspect, clean or re-grease battery connections every two months.

⚠ CAUTION

A battery presents a risk of electrical shock and high short circuit current.

⚠ CAUTION

The following precautions are to be observed when working on batteries:

1. Remove watches, rings, or other metal objects,
2. Use tools with insulated handles,
3. Wear rubber gloves and boots,
4. Do not lay tools or metal parts on top of the battery
5. Disconnect charging source prior to connecting or disconnecting battery terminals,
6. Determine the battery is inadvertently grounded. When inadvertently grounded, remove source of ground. Contact with any part of a grounded battery is capable of resulting in electrical shock. The risk of such a shock is reduced when such grounds are removed during installation and maintenance (applicable to a generator not having a grounded supply circuit.

⚠ WARNING

Do not dispose of battery or batteries in a fire. The battery is capable of exploding.

⚠ WARNING

Do not open or mutilate the battery or batteries. Released electrolyte has been known to be harmful to the skin and eyes and can be toxic.

Vented Batteries

The installation of the engine generator shall provide enough ventilation to ensure that all gases generated by vented batteries during charging, or caused by equipment malfunction are removed.

Battery Charger

⚠ CAUTION

For battery installation, maintenance, and safety requirements refer to battery manufacturer's battery installation and safety manual.

This automatic battery charger is an intelligent module which maintains lead acid batteries at a full charge, when the HSB has been properly installed. Continual monitoring and maintenance will promote long battery life. In accordance with the principle of high efficiency, at Full Load, >85% of efficiency is achieved. This charger is a maintenance battery charger. If the battery voltage falls below 6V, the charger will not re-change the batteries.
To properly maintain battery efficiency, you must follow the battery manufacturers; safety instructions, warnings and proper maintenance procedures.

The battery(s) might be discharged to a level that is too low to recharged with this charger (battery voltage below 6V). If this is the case, the batteries will need to be charged individually. Remove all battery cables from the batteries and follow the battery manufacturers' instructions on properly servicing/charging the batteries.

Be careful to avoid corrosion on the battery post(s). Corrosion can have the effect of creating an insulation between the post(s) and the cable(s), this will severely affect the performance of the battery.

14-KW (MODEL 100515)

The LEDs on the battery charger indicate the state of the battery's charge level. Battery charger rating 24 Vdc 1.6A.

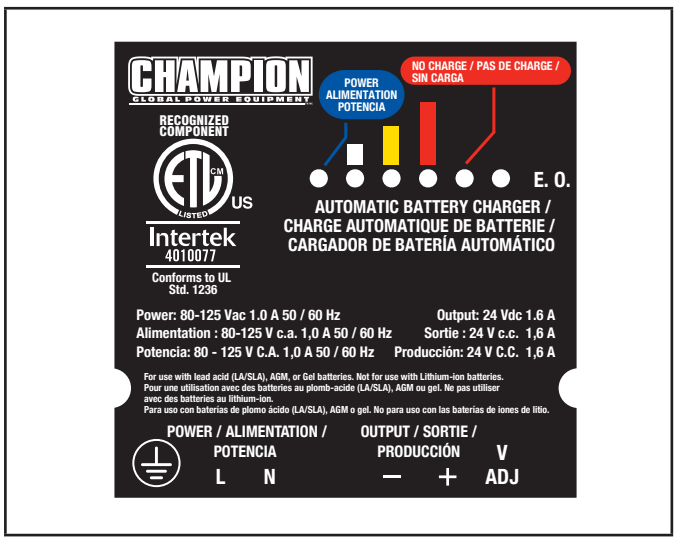

Power	Lit to indicate the battery is fully charged.
Small Bar	Lit to indicate the battery is receiving a trickle charge
Middle Bar	Lit to indicate current output is near 50%.
Large Bar	Lit to indicate the charger is operating above 50% capacity.
No Charge	Lit to indicate a battery charging problem. If this LED is lit, the LED on the aXis Controller®, "LOW BATTERY" will also be lit.

A 120 VAC circuit must be installed for battery charging. From ATS fuse block or distribution panel install 120V circuit to the terminal block L and N.

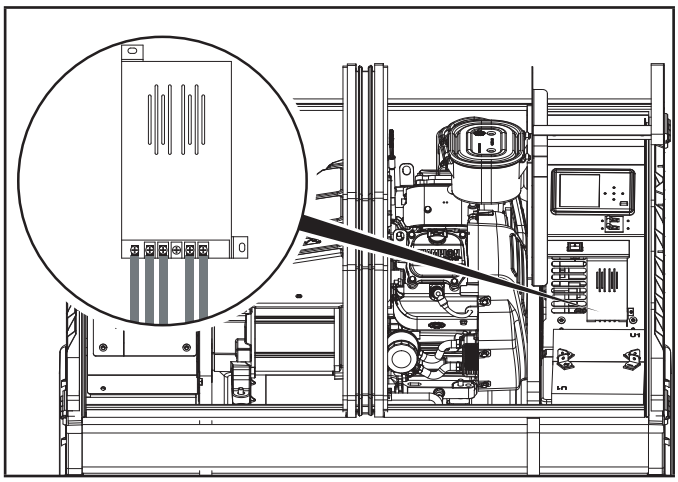

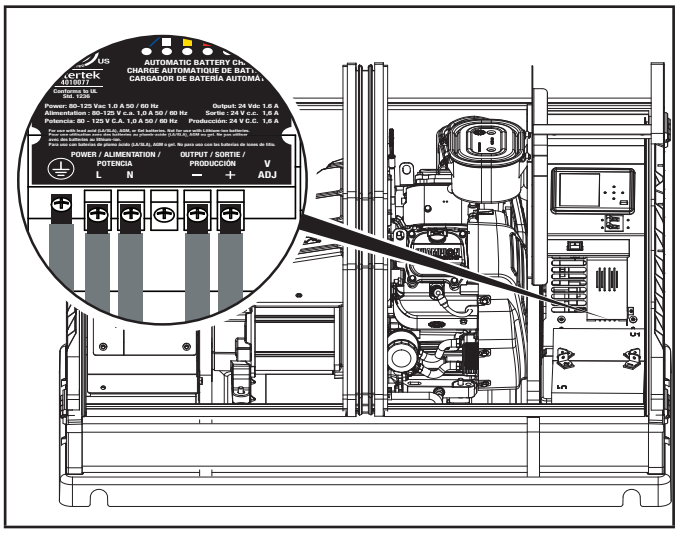

Wire Land Points	Function	Wire Color
Wire land #1	Ground	G (green)
Wire land #2	L1	P (pink)
Wire land #3	N	W (white)
Wire land #4	Not Connected- Empty	
Wire land #5	B-	B (black)
Wire land #6	B+	R (red)

A 120VAC circuit must be installed for battery charging. From ATS fuse block or distribution panel install L1 and N to Wire land # 1 and #2 respectively.

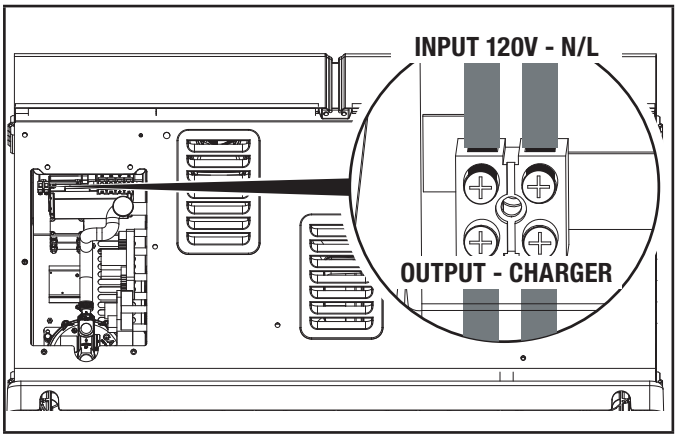

Wire Land Points	Function	Wire Color
Wire land #1	N	W (white)
Wire land #2	L	P (pink)

22-KW (MODEL 100304)

The LEDs on the battery charger indicate whether the charger has 120VAC power, if there is a battery fault and the charger state. Battery charger rating 24 VDC 7 A.



LED	SYMBOL	DESCRIPTION
	V	**DC Voltage Adjustment** - Preset from the factory for proper DC charger output. No adjustments necessary.
	E. O.	**Enforced Output** - Press to charge battery at maximum amperage for a short period.
Green		**Power** - Lit to indicate the charger is receiving 120 VAC and is ready to charge.
Red		**Fault or No Charge** - Lit to indicate a battery charging problem. If this LED is lit, the LED on the fLex Controller®, "LOW BATTERY" will also be lit.
Yellow		**High Charge** - Lit to indicate the charger is operating above 50% capacity. Trickle charge and mid charge LED will also be lit.
Yellow		**Mid Charge** - Lit to indicate the charger is near 50% capacity. Trickle charge LED will also be lit.
Yellow		**Trickle Charge** - Lit to indicate the battery is receiving a trickle charge.
No Yellow		**Low Trickle Charge** - When no yellow LEDs are lit, the charger is in low trickle charge state.

A 120 VAC circuit must be installed for battery charging. From ATS fuse block or distribution panel install 120V circuit to the terminal block L and N.

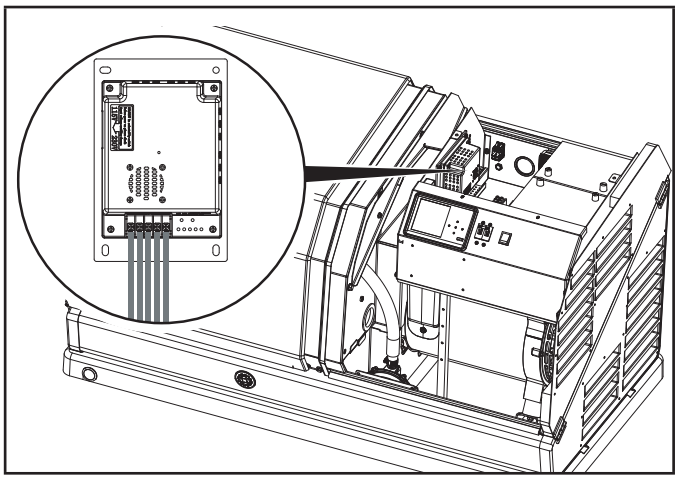

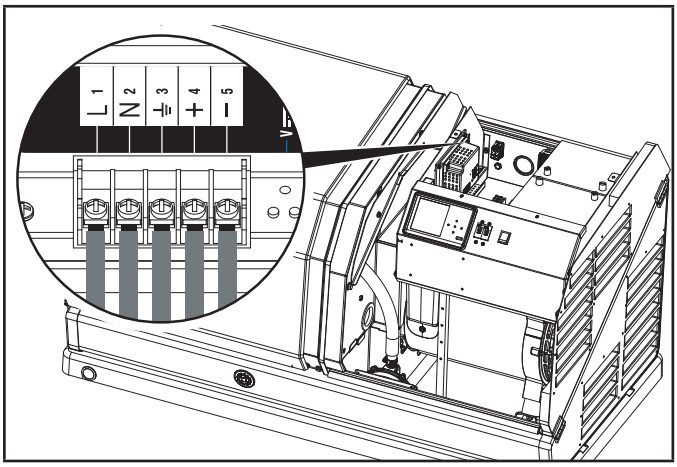

Wire Land Points	Function	Wire Color
Wire land #1	L1	R (Red)
Wire land #2	N	W (white)
Wire land #3	Ground	G (Green)
Wire land #4	+	R (Red)
Wire land #5	-	B (black)

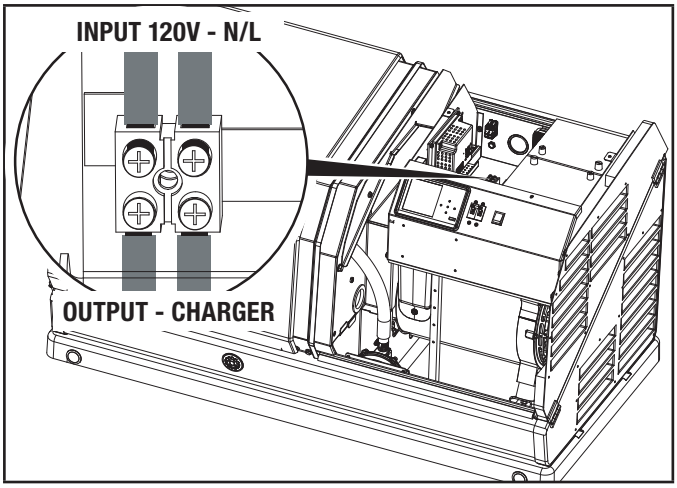

The terminal block is prewired by the factory to the charger L1 and N. A 120 VAC circuit must be installed for battery charging from the ATS or another 120VAC circuit.

Wire Land Points	Function	Wire Color
Wire land #1	L	R (Red)
Wire land #2	N	W (white)

⚠ CAUTION

The electrolyte is a diluted sulfuric acid that is harmful to the skin and eyes. It is electrically conductive and corrosive.

⚠ CAUTION

The following procedures are to be observed:

1. Wear full eye protection and protective clothing,
2. Where electrolyte contacts the skin, wash it immediately with water,
3. Where electrolyte contacts the eyes, flush thoroughly and immediately with water and seek medical attention, and 40 Spilled electrolyte is to be washed down with an acid neutralizing agent. A common practice is to use a solution of one pound (500 grams) bicarbonate of soda to one gallon (4 liters) of water. The bicarbonate of soda is to be added until the evidence of reaction (foaming) has ceased. The resulting liquid is to be flushed with water and the area dried.

⚠ WARNING

Lead-acid batteries present a risk of fire because they generate hydrogen gas.

The following procedures are to be followed:

1. DO NOT SMOKE when near batteries.
2. DO NOT cause flame or spark in battery area, and
3. Discharge static electricity from body before touching batteries by first touching a grounded metal surface.

10. WIRING OF THE HSB

Wire Sizing

⚠ CAUTION

Use a torque wrench to tighten conductors, being sure not to overtighten, or damage to the switch base could occur. If not tightened properly, a loose connection would result, causing excess heat which could damage the switch base.

All installations must comply with National, State and Local codes. It is the responsibility of the installer to perform an installation that will pass the final electrical inspection. Conductor wire sizes must be adequate to handle the maximum current to which they will be subjected. The installation must comply fully with all applicable codes, standards, and regulations.

All power cables must enter the enclosure through the knockouts provided. If not using knockouts, conduit entry into the enclosure must be at or below knockouts to maintain the Type 3R rating. NEMA 3R enclosures are rated and tested for outside installation, they are waterproof enclosures and only come with knockouts on the bottom side of the enclosure. If a NEMA 3R enclosure in used for an inside installation, a greenlee type punch will be required to make a knockout(s) on the side or top of the enclosure.

Conduits should be arranged to provide separation between the Utility Source and HSB Source supply conduits inside the enclosure. Conductor wires must be properly supported, of approved insulated qualities, protected by approved conduit and of the correct wire gauge size in accordance with all applicable codes.

Final inspection may require the installation of an emergency shut down switch, installed and located where Home Standby Generator Engine (prime mover) can be shut down instantly.

Verify that the (4) pre-installed 14-2 conductor lugs are free of corrosion and are fully fastened and spaced properly. Make sure conductor wires are labeled and/or marked accordingly.

14-kW (Model 100515)

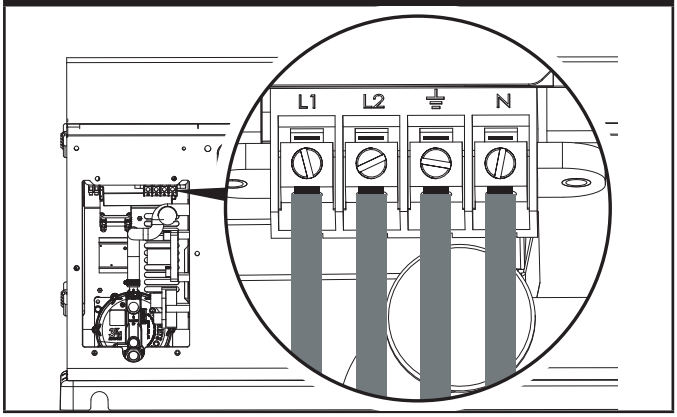

22-kW (Model 100304)

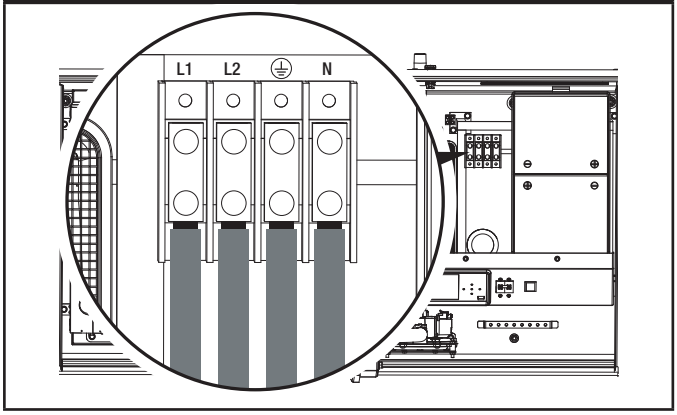

Utility Circuit and Generator Power Connections

Conductor sizes must be adequate to handle the maximum current to which they will be subjected to, based on the 75 degrees C column of tables, charts, etc. used to size conductors. The installation must comply fully with all applicable codes standards and regulations.

Surge protection

⚠ CAUTION

Voltage fluctuation may impair the proper functioning of sensitive electronic equipment.

Electronic devices, including computers and many programmable appliances use components that are designed to operate within a narrow voltage range and may be affected by momentary voltage fluctuations. While there is no way to prevent voltage fluctuations, you can take steps to protect sensitive electronic equipment.

Install UL1449, CSA-listed, plug-in surge suppressors on the outlets feeding your sensitive equipment. Surge suppressors come in single or multi-outlet styles. They're designed to protect against virtually all short-duration voltage fluctuations.

AVR = Automatic Voltage Regulator

The AVR is an electrical or electronic device that maintains the voltage of a power source within predetermined limits. AVR is a regulator that automatically keeps voltage within the prescribed range required by the electrical equipment that will be provided power by the HSB. The AVR uses solid-state semiconductor devices to smooth out variations in the flow of current.

The AVR monitors the output voltage and controls the input voltage to the exciter of the generator. By increasing or decreasing the generator control voltage, the output voltage of the generator increases or decreases accordingly. The AVR calculates how much voltage has to be sent to exciter numerous times a second, therefore stabilizing the output voltage to a predetermined set point.

There are 3 connectors that come from the AVR. For reference we have numbered them 1, 2, and 3 when viewed right to left.

1. **Connector #1** (far left), has 4 leads. The 2 leads on the right side of the connector (top & bottom) are BLUE. They run to the excitation windings on the stator. The 2 leads on the left side of the connector (top & bottom) are GREEN (top) and WHITE (bottom), they run to the sampling windings of the stator.
2. **Connector #2** (center), has 2 leads. The top lead is BROWN, when connected it runs to pre-boost/magnetized pin #7 on the Engine Controller Module. The bottom lead is GREEN and runs to ground.
3. **Connector #3** (far right connector), has 2 leads. A RED lead (top) that runs to the positive side of the brush assembly, and a BLACK lead (bottom) that runs to the negative side of the brush assembly. The brush assembly provides flow through of excitation current to the rotating rotor. Brushes are made of long lasting material that seldom wear out or fail. The contact points of the brush assembly are with two slip rings attached to the rotor. These slip rings can become tarnished or exhibit a glaze, which can create a resistance to the flow of electricity. This can occur when the HSB is not exercised or ran over long periods of storage.

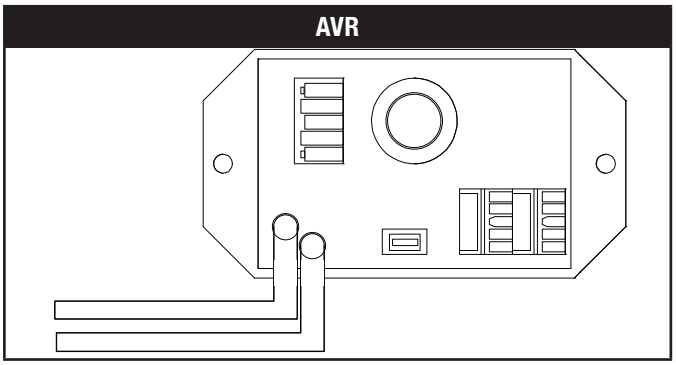

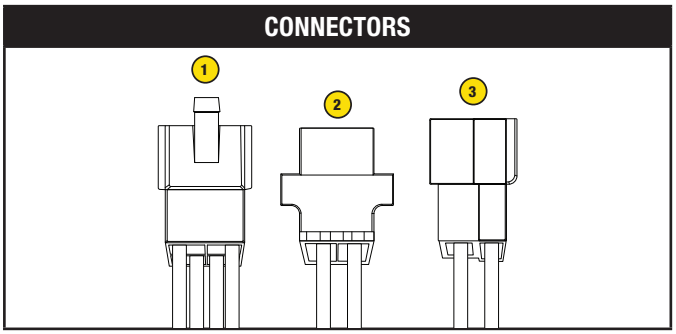

Slotted potentiometer is factory set to the correct voltage and should not require adjustment.

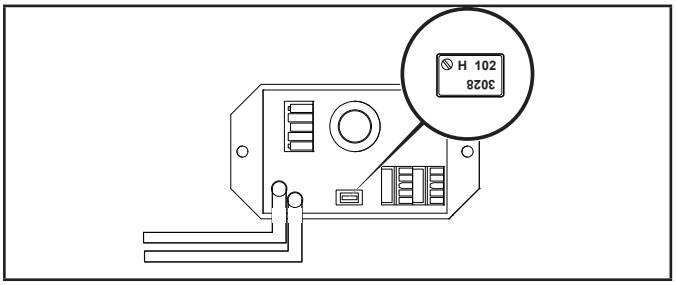

Engine Relay Module

14-KW (MODEL 100515)

This module is the interface between the Engine Controller, ATS Controller, alternator, hour meter and battery charger. It is the interface for all on board communications in the HSB.

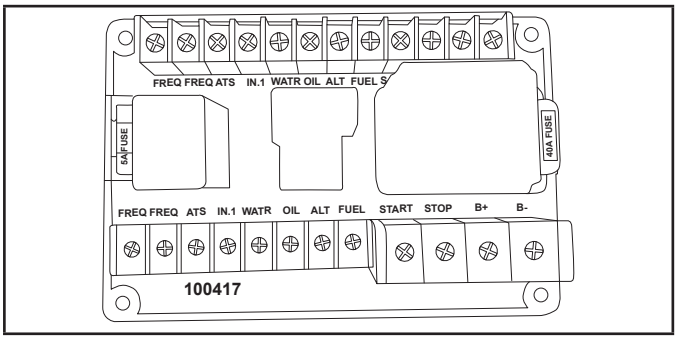

22-KW (MODEL 100304)

The module has two (2) fuses built into the board.

1. A 250VAC 5A mini fuse protecting the system from an over voltage between the alternator and the relays. Remove plastic FUSE cover to access.

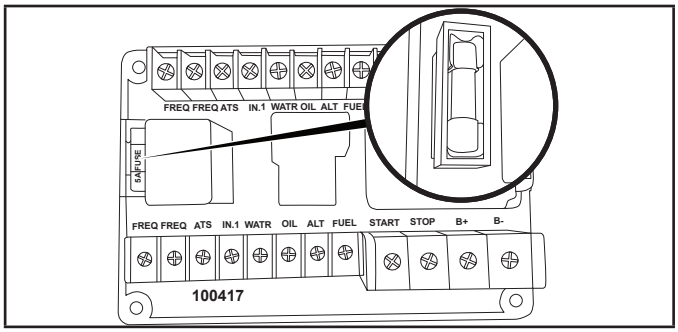

2. An automotive style fuse, 40A (Orange), which protects the system from an excessive transfer voltage output when the ATS relays transfer between utility and generator and generator to utility modes. Remove plastic FUSE cover to access.

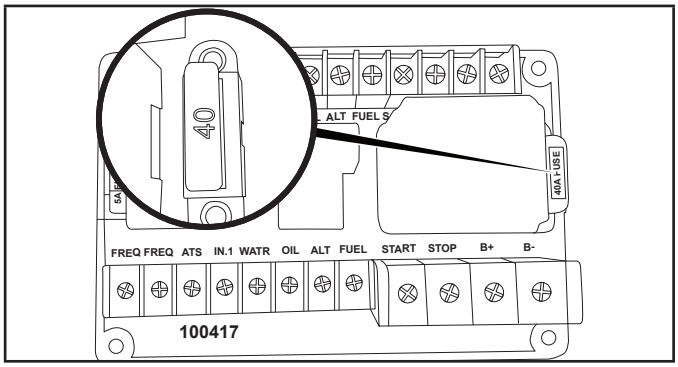

TOP ROW

There are 12 wire land points in the top row, the connection points are all the same size.

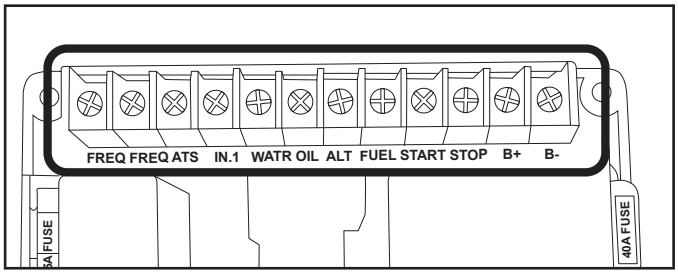

The following are the wire land points, function and wire color, left to right.

Wire Land Points	Function	Wire Color
Position #1	Frequency	R (Red)
Position #2	Frequency	B (BLACK)

Wire Land Points	Function	Wire Color
Position #3	Not connected	Empty
Position #4	Not connected	Empty
Position #5	High engine temperature	BR (brown)
Position #6	Low oil level/pressure	Y (yellow)
Position #7	Not connected	Empty
Position #8	Fuel supply valve	G/B (green/black)
Position #9	Starter	B/W (black/white)
Position #10	Stop	L/B (blue/black)
Position #11	B+	W (white)
Position #12	B-	G (green)

BOTTOM ROW

There are 12 wire land points in the bottom row, 8 are the same size, the remaining 4 points are larger, viewed left to right.

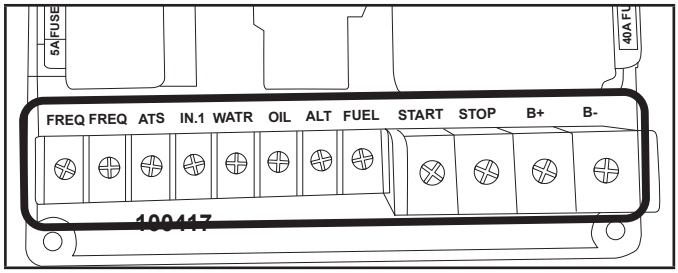

The following are the wire land points, function and wire color, viewed left to right.

Wire Land Points	Function	Wire Color
Position #1	Frequency	R (red)
Position #2	Frequency	B (black)
Position #3	Not connected	Empty
Position #4	Not connected	Empty
Position #5	High Engine Temperature	BR (brown)
Position #6	Low oil level/pressure	Y (yellow)
Position #7	Not connected	Empty
Position #8	Fuel supply valve	G/B (green/black)
Position #9	Starter	B/W (black/white)
Position #10	Stop	L/B (blue/black)
Position #11	B+	W (white)
Position #12	B-	G (green)

Exterior Warning LED

The exterior of the generator enclosure includes a Warning LED that illuminates RED when a fault has occurred

The Warning LED provides a visual indicator to homeowners and service technicians that a fault has occurred, and service is needed.

The warning LED is located on the back-exterior of the HSB.

14-kW (Model 100515)

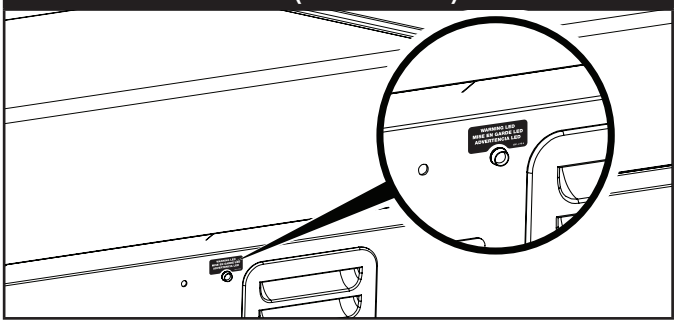

22-kW (Model 100304)

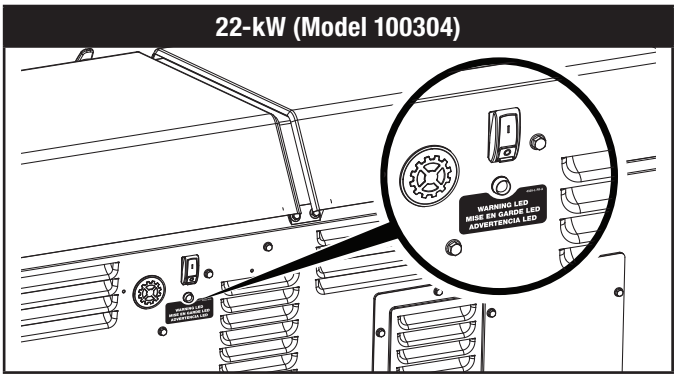

Generator ON/OFF Switch

NOTICE

When maintenance or service work is performed on the generator or the home's electrical system, to prevent accidental startup pull out the fuse from the aXis Controller® panel and disconnect the batteries.

This generator has ON/OFF switches that when turned off, will shut down the HSB (if running) and deactivate the aXis controller® preventing future starts. These switches should be used in instances where the HSB needs to stay off regardless of utility power presence. When either switch is in the OFF position, the HSB will not exercise or start for any reason.

When both of the switches are in the ON position, the aXis controller® will be energized and the HSB will be controlled by the programming of the aXis controller®. Both switches need to be in the ON position in order for the HSB to operate in AUTO mode.

NOTE: *Both switches need to be in the ON position to place the aXis Controller® in the AUTO mode and in order to exercise the HSB.*

Inside	Back / Side
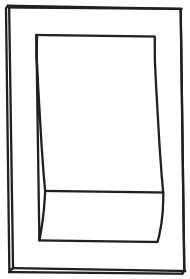	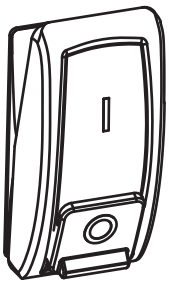

Microswitch

There is a microswitch located behind aXis Controller® panel. This microswitch prevents accidental starting while accessing this area.

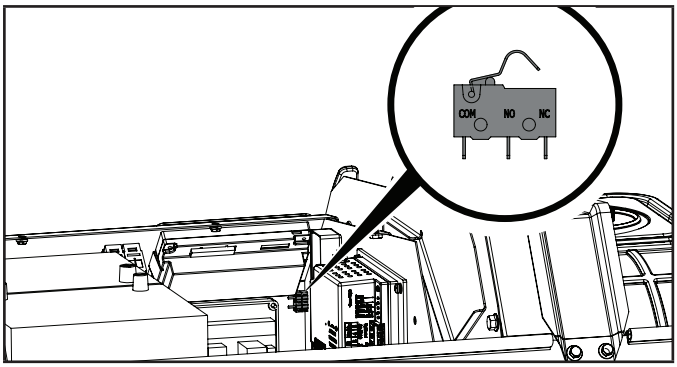

To access this microswitch, remove four M6 x 12 bolts from the cover using a 10mm wrench (not included).

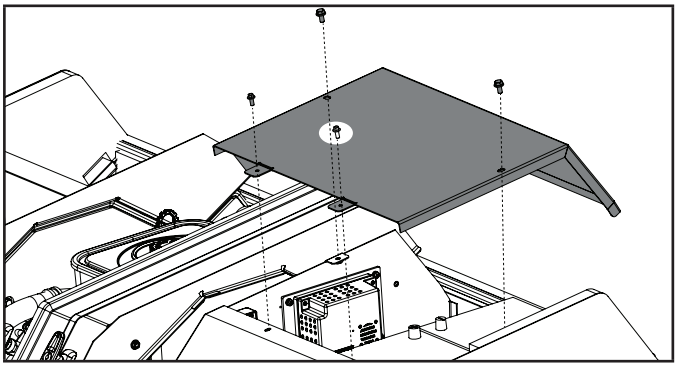

Swing the aXis Controller® panel forward after removing the top cover, HSB starting will be disabled.

Close and secure the aXis Controller® panel, then the top cover with four M6 x 12 bolts using a 10mm wrench (not included) to start the generator. Once closed, the microswitch will allow the HSB to start.

aXis Controller®

aXis CONTROLLER® STATUS ICONS

The status icons are located at the top of the aXis Controller®.



Utility Pole

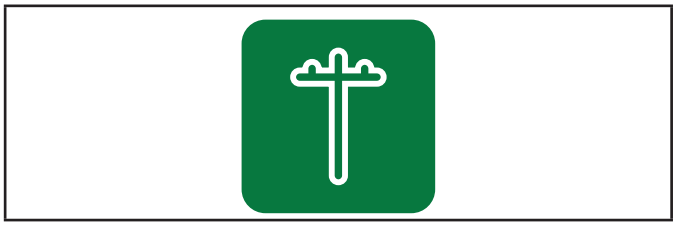

The utility pole icon will indicate utility is the source of power.

Transfer Power Direction

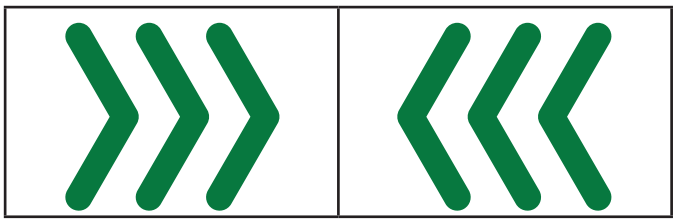

Shows the direction of power

House



Icon for house receiving power

HSB

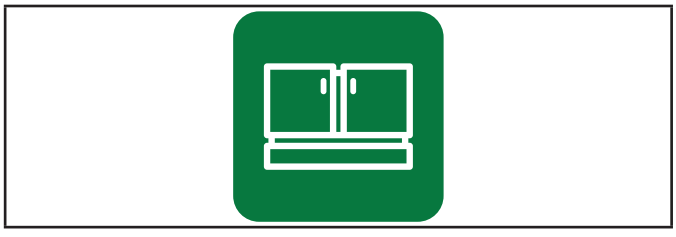

The HSB icon will indicate power when the generator is the source of power

aXis CONTROLLER® INFORMATION ICONS

The information icons are located at the bottom right side of aXis Controller® icon touch pad.

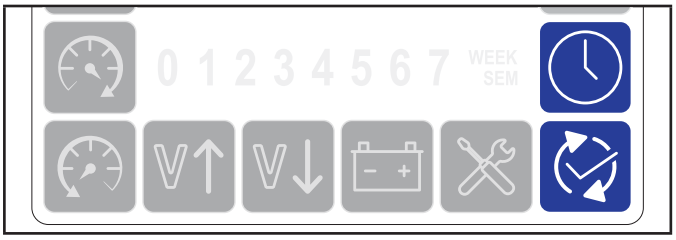

Hour Meter



The hour meter keeps track of all running time of the HSB. This includes run time during a utility power outage and during the weekly exercise cycle. This provides the owner with a record of operating time which is useful in keeping track of scheduled maintenance intervals. Refer to the scheduled maintenance chart. The hour meter can't be reset. The initial time registered on the meter when first started up (installed) will reflect the factory test time, this is a normal industry standard. The hour meter only reflects hours, it does not reflect RPMs or any other function.

Exercise Icon



The BLUE icons will be lit when the HSB is performing the exercise period. Refer to "Setting Exercise Time" to establish the weekly exercise period. When the exercise period is complete the icon will turn off and the HSB will resume its standby monitoring.

aXis CONTROLLER® FAULT ICONS

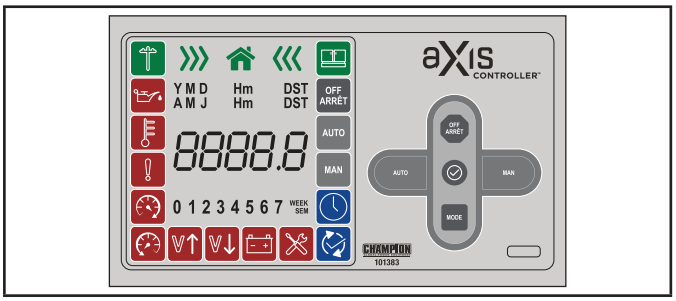

Low Oil Pressure Shutdown

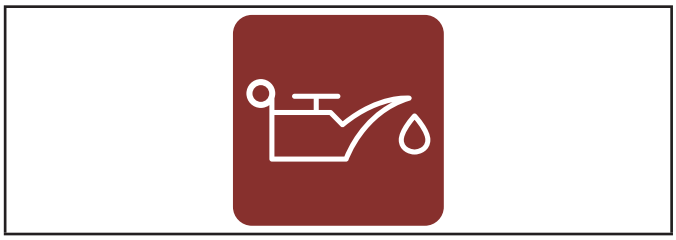

The RED icon will be lit when the engine oil pressure drops below a safe operating level. When this fault is detected, the HSB will shut down and re-start will be disabled. RED icon on the controller module and exterior LED will be lit.

Check the oil level. The oil level should be at the FULL mark, if necessary, add oil. DO NOT overfill. Inspect the unit for a possible oil leak, if a leak is discovered, contact Champion or your nearest Authorized Champion Dealer. Follow the FAULT CODE RESET instructions to clear the fault after service.

High Engine Temperature

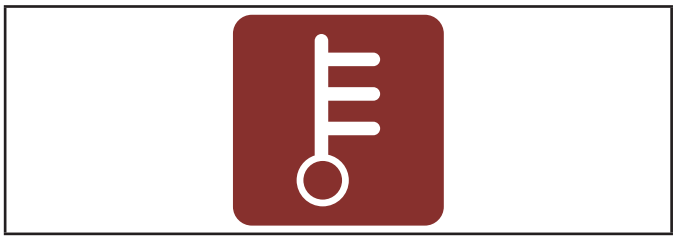

The RED icon will be lit if the engine operating temperature exceeds the factory preset limits. If excessive operating temperature is detected, the HSB will shut down and re-start will be disabled. The RED icon on the aXis Controller® and exterior enclosure LED will be lit.

This failure could be the result of an excessive load or high ambient temperatures. Should this fault occur do the following;

1. Open the enclosure doors to increase air flow throughout the unit
2. Check oil level add oil if required
3. Inspect the interior and exterior of the enclosure for debris, leaves, etc., and remove them to increase air flow around and inside the unit.
4. Once the engine temperature falls into the normal operating range, generally 30 minutes, follow the FAULT CODE RESET instructions to clear the fault after service.
5. Close the enclosure doors and the unit is ready to run.

Over crank



The RED icon will be lit if the engine does not start. This prevents the generator from damaging itself or other related components. When the fault is detected, the generator will shut down and re-start will be disabled. RED icon on the controller module and exterior LED will be lit.

STARTER CRANK CYCLE TIMES - If the generator fails to start, the "OVER CRANK" icon will flash on the aXis Controller® and a steady lit exterior warning LED on the backside of the generator. Below outlines the crank cycle differences depending on the mode selected. Please note there is a 120 second lockout or rest period after the cycles for each mode listed to allow the starter to properly cool.

Follow the FAULT CODE RESET instructions by pushing the OFF button to reset and clear the fault. Regardless of when you press OFF, you will need to allow the timer to count down to zero (0) before proceeding with another start procedure. The lockout time remaining is not shown on the screen.

MODE	ON (seconds)	OFF (seconds)	CYCLES	LOCKOUT (seconds)
AUTO The generator is in the ready position. The aXis Controller® must be in the AUTO mode in order to exercise.	9	10	5	120
MAN The generator will start in MANUAL mode.	10	10	2	120
EXERCISE (PLC) The generator is connected to a Champion Automatic Transfer Switch.	8	30	3	120
EXERCISE (2-wire) The generator is connected to a non-Champion Automatic Transfer Switch.	9	10	5	120

This failure could be the result of insufficient fuel supply. Check the in-line fuel shut off valves and make sure they are in the ON/ OPEN position. Position them in the correct position, follow the FAULT CODE RESET instructions to clear the fault after service. If they are in the correct position and the HSB shows a fault light again, it's recommended to perform a Manometer pressure check by an Authorized Champion Dealer or installer. This will make sure the correct amount of fuel is being delivered to the HSB when it starts.

Insufficient battery output could result in poor cranking cycles, not permitting the engine starter to reach optimum starting RPM to start the engine. This can be verified by checking the Battery Charger icon, NO CHARGE. If this occurs, the individual battery voltages must be checked to determine if the batteries are properly charged or if they have failed. It is extremely important to follow all the cautions and warnings per the battery manufacturer concerning installation, service, maintenance and replacement procedures.

Hz Over speed/Under speed

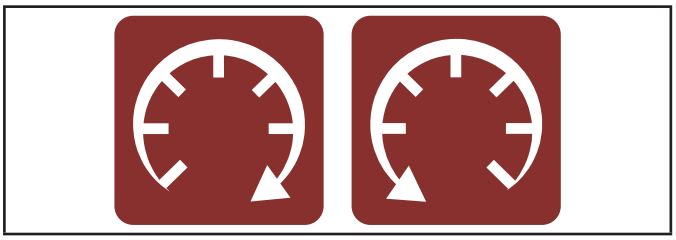

The RED icon will be lit if the engine was operating above or below its preset speed limits. These limits are factory set to protect the HSB and the circuits connected to the generator output circuits. When this fault occurs, the HSB will shut down, light the RED icon, shut down and re-start will be disabled. The exterior warning LED on the back of the HSB enclosure will be activated and lit.

If this failure occurs, contact Champion or your Authorized Champion Dealer. The RED icon will remain lit until the failure has been corrected, the HSB will not attempt to transfer or run.

Line Over Voltage

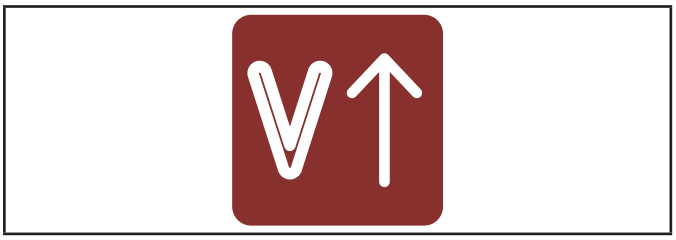

The RED icon will be lit if the HSB generator output power exceeds preset limits of 257 VAC.

When this fault occurs, the HSB will light the RED icon, shut down and re-start will be disabled. The exterior warning LED on the back of the HSB enclosure will be activated and lit. Check and adjust AVR. Set Voltage to 240 VAC.

Line Under Voltage

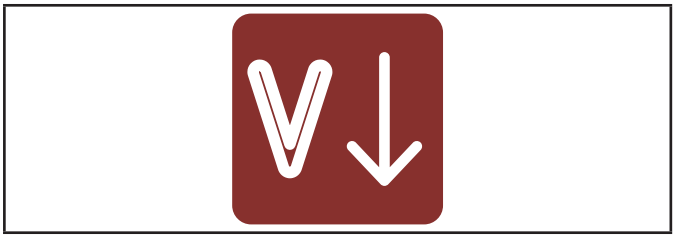

The RED icon will be lit if the HSB Generator output power is below preset limits.

When this fault occurs, the HSB will light the RED icon, shut down and re-start will be disabled. The exterior warning LED on the back of the HSB enclosure will be activated and lit. Check and adjust AVR. Set Voltage to 240 VAC.

Low Battery

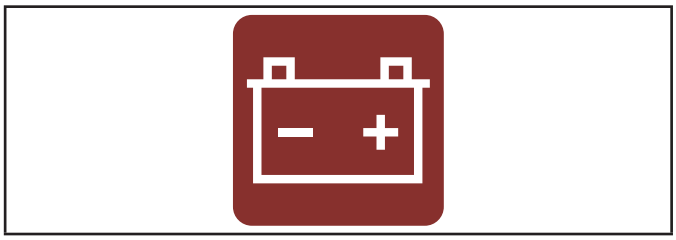

The RED icon will be lit if the battery voltage falls below 21.0 volts for at least 5 seconds while the engine is running. If the battery voltage rises above 22 volts, the icon will turn off. Battery voltage is NOT monitored when the engine is cranking, just when the engine is running. If the RED icon comes on it will not shut the HSB off, it will remain lit until the battery condition meets the required output.

When the icon remains lit, the battery charging should be checked and the condition of the batteries. Follow the FAULT CODE RESET instructions to clear the fault after service.

Requires Maintenance



The RED icon will be lit if the HSB generator is ready for maintenance.

The maintenance hour meter counts from 100 hours to 0. You need to reset when the hour meter reaches 0. Refer to the scheduled maintenance chart.

Refer to “Resetting the maintenance hour meter” for instructions after performing maintenance.

FAULT PROTECTION

In all cases when the icon is RED, this is an indicator that the HSB has registered a fault and must be corrected. Only the “LOW BATTERY” and “MAINTENANCE” icons will not latch out or shut down the HSB. ALL other RED icon faults will latch out, shut down, disable starting and light the RED icon on the aXis Controller® and the exterior warning LED on the backside of the HSB.

FAULT CODE RESET

In the event a fault has occurred push OFF button to reset then AUTO button to re-arm.

⚠ WARNING

All faults should be taken seriously and corrected before reset process is performed.

Wi-Fi Setup Method

1. Use a Wi-Fi enabled device (laptop, smart phone, tablet, etc.) in near proximity to the ATS.
2. Search and connect to network name (SSID) “Champion XXXX” where XXXX will match the last four digits of the serial number that is printed on the control board.

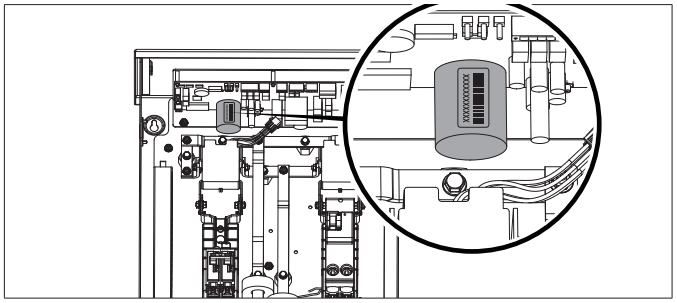

2a. The password for the network is located on a label on the dead front of the ATS.

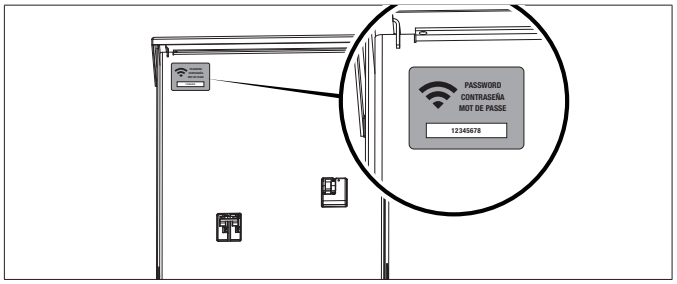

NOTICE

During the setup your device will disconnect from the internet. The Champion Wi-Fi is a direct connection between your device (laptop, smart phone, tablet, etc.) and the ATS, and it does not connect to the internet. Some Android devices may show the following screen – Choose “Connect only this time.”

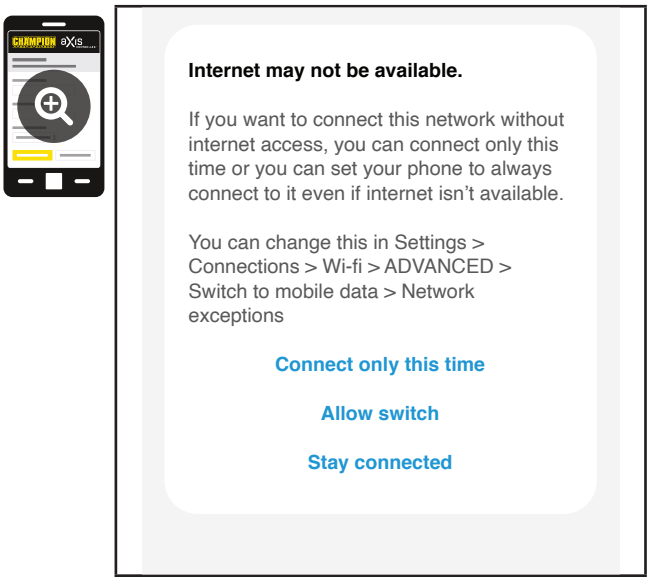

3. After connecting Wi-Fi, open your device’s web browser. In the browser address change the address to 192.168.0.90 and begin search. This will direct your browser to the Champion aXis Controller® Home Standby Generator Settings page located on the ATS. If your device’s web browser does not load the Champion aXis Controller® Home Standby Generator Settings Page but rather stays connected to the internet, turn off mobile data on the device (if applicable) and make sure the device is not connected to any other networks.

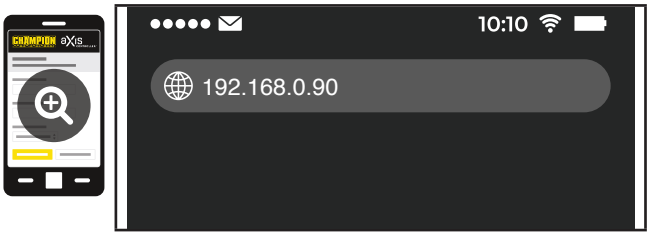

4. On the Champion aXis Controller® Home Standby Generator Settings Page, set the date and time. Use either the dropdown boxes or the “USE THIS DEVICE DATE & TIME” button to set the time and date.

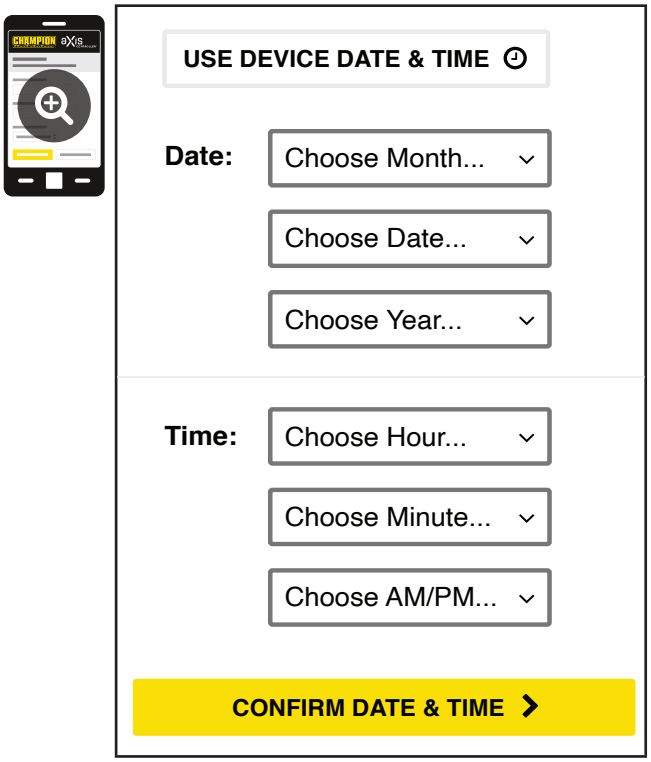

5. Confirm and apply the settings before continuing. If you do not apply immediately, the clock will be later than actual. Unsaved changes are highlighted.

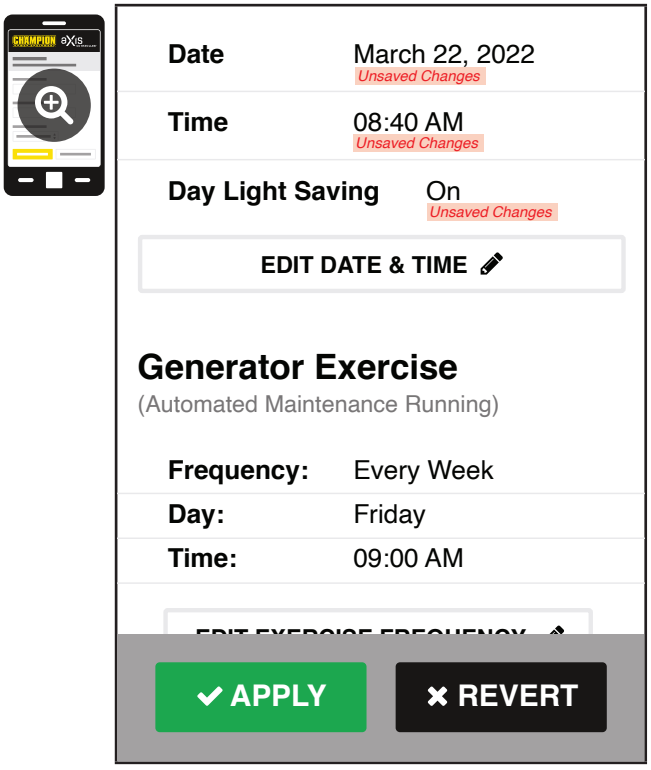

6. Some operating systems will require additional steps to confirm update, accept all pop-up windows until progress bar is seen on screen.

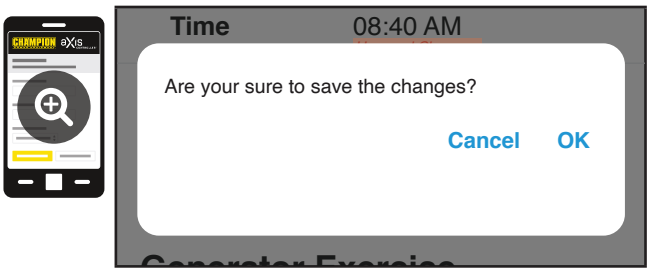

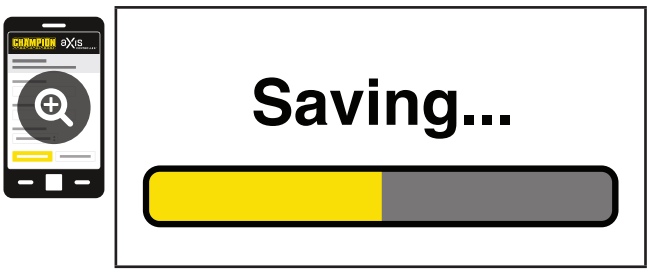

7. Set the HSB exercise frequency and schedule.

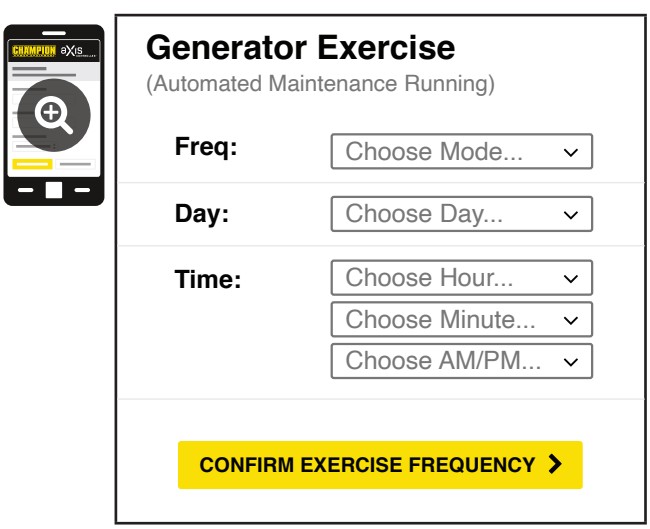

8. Confirm and apply the settings before continuing. Unsaved changes are highlighted.

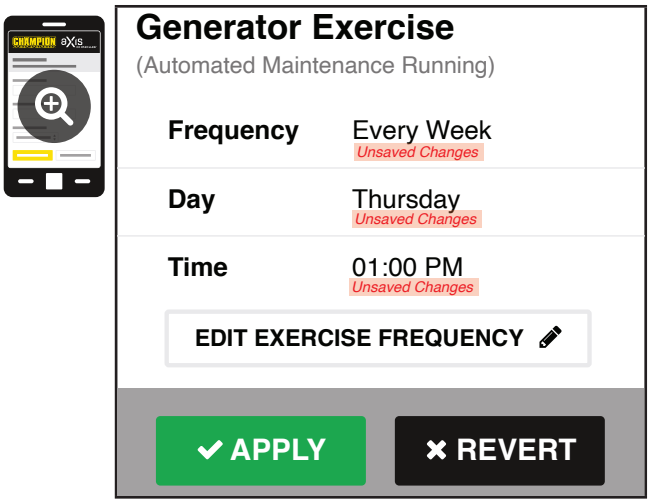

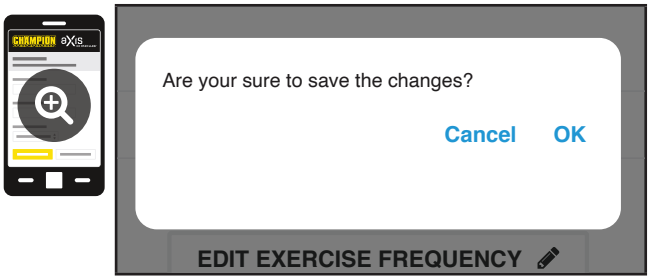

9. Wireless network settings are not used at this time. The default values (shown below) should not be adjusted. Adjustment of this factory settings will require a certified electrician to correct.

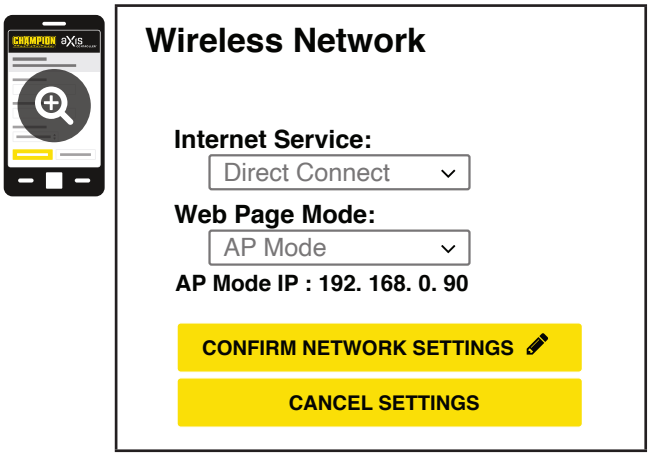

10. The time, date, and exercise information have now been setup for the aXis ATS and HSB. You can close your browser and disconnect from the ATS Wi-Fi, or skip to step 2 in the next section “ATS and HSB STATUS USING WI-FI”

ATS and HSB Status Using WIFI

1. Using a WIFI enabled device, connect to the “Champion HSB” WIFI network following steps 1, 2, and 3 from WIFI Setup Method.
2. After loading the Home Standby Generator Settings page, locate and click the icon at the bottom right corner of the page.
3. You are now viewing the ATS and HSB status page. Items such as voltage, frequency, current, etc. can all be viewed for both utility and HSB power. All of the information is live. There are three tabs located at the top of the page. ATS GEN LMM ATS, GEN, and LMM. Each tab will display the status for the Transfer Switch, Home Standby Generator, or Load Management Module(s) respectively.
4. When finished viewing the status of the ATS, Generator, and LMM, close your browser and disconnect from the WIFI.

Programming aXis Controller®



NOTICE

Setting values are not autosaved. You must press OFF to save the changes and exit the programming.

Please wait for the decimal point to stop flashing before moving on to the next function. If you hit ✓ too soon while the decimal point is still flashing, it does not save the change.

1. To begin programming, disable AUTO by selecting OFF.
2. After the HSB is set to OFF, press and hold ✓ until the screen changes (decimal point will flash) to enter programming mode. The display will show YA for year and the clock icon will illuminate.

   Please wait for the decimal point to stop flashing before moving on to the next function. If you hit ✓ too soon while the decimal point is still flashing, it doesn't save the change.

3. **Year (Y)** - choose current year (example 2021 would be 21) with 18 to 47.

   Set year using MODE

   ✓ for next

4. **Month (M)** - choose January to December with 1-12.

   Set month using MODE

   ✓ for next

5. **Day (D)** - choose the day from 1 to 31.

   Set day using MODE

   ✓ for next

6. **Week Day** - choose week day from 1 to 7.

   Set week using MODE

- ☐ 1= Monday
- ☐ 2= Tuesday
- ☐ 3= Wednesday
- ☐ 4= Thursday
- ☐ 5= Friday
- ☐ 6= Saturday
- ☐ 7= Sunday

   ✓ for next

7. **Hour (H)** - choose hours in military time 0 - 23.

   Set hour using MODE

   ✓ for next

8. **Minute (m)** - choose the minute from 0-59.

   Set minute using MODE

   ✓ for next

9. **Daylight Saving Time (DST)** - choose DST on (1) or off (0).

   Set DST using MODE

   ✓ for next

10. **Maintenance Hour Meter (H)** - Factory setting is 100 hours. View current hours and reset as needed.

    Set maintenance hour meter using MODE

    ✓ for next

11. **Exercise**

    Set exercise schedule using MODE

- ☐ 0= no exercise
- ☐ 1= 1 time per month (12 times annually)
- ☐ 2= 2 times per month (24 times annually)
- ☐ 3= 4 times per month (48 times annually)
- ☐ 4= weekly (52 times annually)

   ✓ for next

   Week Day (exercise) - choose week day from 1 to 7.

   Set week using MODE

- ☐ 1= Monday
- ☐ 2= Tuesday
- ☐ 3= Wednesday
- ☐ 4= Thursday
- ☐ 5= Friday
- ☐ 6= Saturday
- ☐ 7= Sunday

   ✓ for next

   Hour (exercise) - choose hours in military time 0 - 23.

   Set hour using MODE

   ✓ for next

   Minute (exercise) - choose the minute from 0-59.

   Set minute using MODE

   ✓ for next

12. **Brownout** -

    14-kW (Model 100515) Does not have this setting.**
    22-KW (Model 100304) See below.

    Allows you to adjust the settings of the aXis Controller® to delay start up of the HSB during a brownout or partial, temporary reduction in system voltage or total system capacity from your utility.

    You can cycle through these to select using MODE

    ✓ for next

13. When finished, press OFF to save all changes.

PIN LOCATIONS

(On backside of the controller)

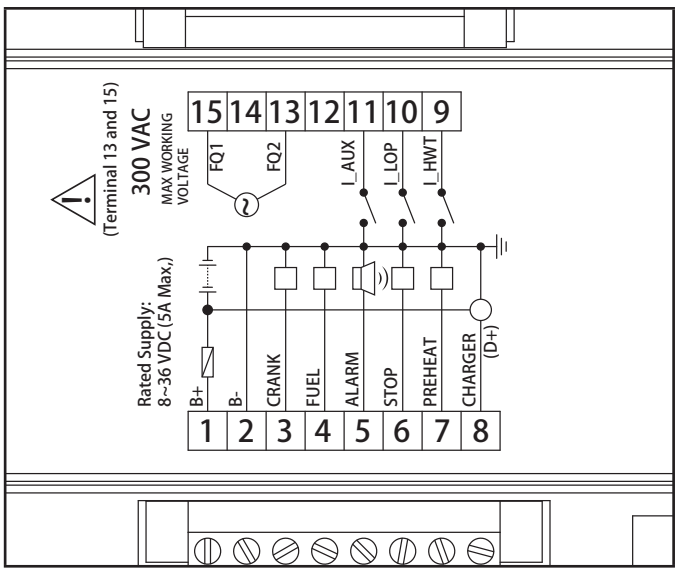

The pins relate to a function of the aXis Controller®. These functions control the operation of the HSB aXis Controller® module. There are 15 pin locations. Remember the icons on the front side of the module are only indicators of a run (GREEN) or fault (Red). These are the designated pin locations, function and wire colors for reference;

Pin Location	Function	Wire Color
Pin 1	B+	W(White)
Pin 2	B-	G (Green)
	Used for two-wire start	
Pin 3	Motor start signal	B/W (Black/White)
Pin 4	Fuel valve	G/B (Green/Black)
Pin 5	Alarm	L/B (Blue/Black)
Pin 6	Stop	L (Blue)
Pin 7	Signal to alternator	R/B (Red/Black)
Pin 8	Not Connected	
Pin 9	Engine High Temp	Br (Brown)
Pin 10	Low Oil Pressure	Y (Yellow)
Pin 11	Used for two-wire start	
Pin 12	Not Connected	
Pin 13	Frequency Over/Under	R (Red)
Pin 14	Not Connected	
Pin 15	Frequency Over/Under	B (Black)

DIP Switches (Bottom side of aXis Controller®)

The 10 DIP switches relate to a program function of the aXis Controller®. These functions control the operation of the HSB. The figure below shows the designated factory switch settings for reference.

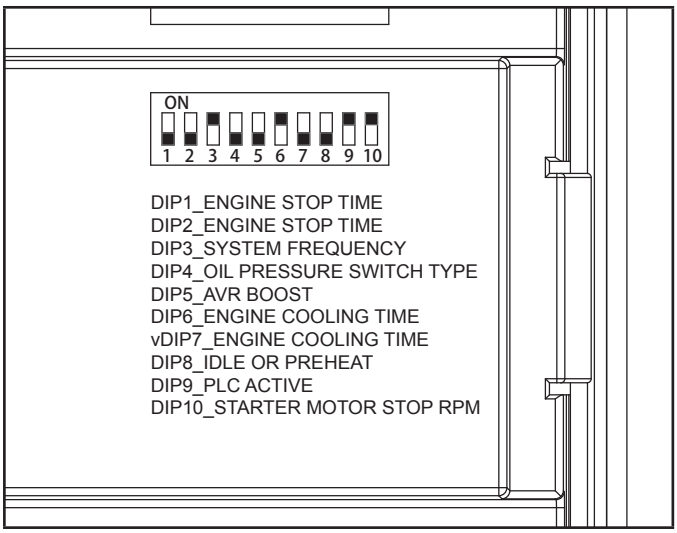

Automatic Transfer Switch (ATS)

The most reliable and convenient method to transfer power is with an automatic transfer switch (ATS). The ATS will automatically disconnect the home from the utility power prior to the HSB functioning (see NEC 700, 701 and 702). Failure to disconnect the home from the utility with an approved UL listed ATS can result in damage to the HSB and can also cause injury or death to utility power workers who may receive electrical back-feed from the HSB.

ATS includes sensors to detect when a power failure (utility lost) occurs. These sensors trigger the ATS to disengage the home from the utility power. When the HSB reaches the proper voltage and frequency, the ATS will automatically transfer generator power to the home.

The ATS module continues to monitor the utility source for the return of utility power. When the utility power returns, the ATS disengages the home from generator power and re-transfers the home to utility power. The HSB is now off line and will shut down-returning to the standby mode.

NEMA 3R – This type of enclosed ATS is similar to the indoor box, except that it is a weatherproof enclosure and required for exterior installations by code. The enclosure has knockouts on the bottom and side, and requires water tight connections when installed outside per code. This enclosure can also be used inside.

aXis Controller® Module

This standby generator is designed to communicate with the ATS using the integrated aXis Controller®. In order to utilize features such as load management, wifi programming, wireless exercise programming, etc., it is necessary that the ATS contains aXis Controller® electronics.

While it is possible to connect this standby generator to a non-aXis Controller® ATS using the two-wire connection shown in this manual, it will reduce the functionality of the standby generator significantly. If the standby generator is being controlled with the two-wire connection, the standby generator will turn on and off based on the two-wire signal. Full power will still be provided through the circuit breaker however will lose functionality of the ATS (like day, date, time, excercise settings).

ATS Installation

Refer to the ATS instruction guide enclosed with each ATS for information related to the installation, operation, service, troubleshooting, and warranty.

After Performing Installation of Champion ATS with aXis Controller®, complete the following steps to finish the installation of this standby generator.

NOTE: *If a non-aXis Controller® ATS was installed, please skip to section "Installing Standby Generator to non-aXis Controller® ATS" on page 41 to finish installation.*

FULL SYSTEM CHECK

1. Open Utility breaker for full system test, close breaker after confirming all systems working.
2. After Utility breaker opens engine will start automatically.
3. aXis ATS control panel will reboot on Generator power and control switching of latching relays.
4. Home is now powered by Generator. If Load Management modules (LMM) have been installed, please allow 5 minutes for LMM and AC1/AC2 to become active.
5. Perform Load Learning through ATS panel at this time. LMM units will be dropped and reacquired in order.
6. Close Utility breaker.
7. System is now fully functional.

Commissioning the ATS

1. Put the aXis Controller® in the OFF position.
2. With door and deadfront removed from the ATS cabinet, confirm Generator and Utility circuit breakers are in the "OFF" position.
3. Re-enable the Utility power to ATS.
4. At ATS panel switch Utility circuit breaker to the "ON" position. Allow at least 6 minutes for all ATS functions to resume on controller.
5. Confirm ATS controller in ATS panel has fully booted and LED's indicate proper operating condition.

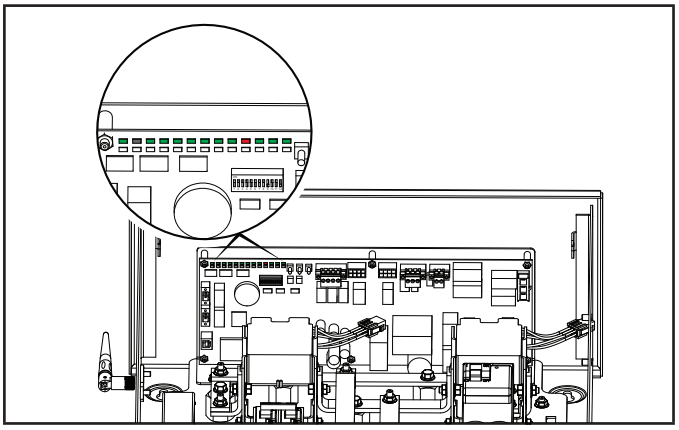

6. Switch Generator circuit breaker to the "ON' position.
7. Replace the deadfront by sliding it from the bottom up into the cabinet; panel should index into the door latch protrusions. Secure it to the deadfront bracket with included nut and stud.
8. Replace the door and secure with included hardware. It is recommended to secure the door with a lock.
9. Return to HSB and press the controller to the "AUTO" position. Confirm icons indicate Utility power is active, Utility side relay is closed, and home is receiving power.
10. Close and lock HSB hoods return keys to customer.

NEMA 1 – This type of enclosed ATS is for indoor installations only.

NEMA 3R – This type of enclosed ATS is similar to the indoor box, except that it is a weatherproof enclosure and required for exterior installations by code. The enclosure only has knockouts on the bottom side for the enclosure, requires water tight fasteners/ grommets when installed outside per code. This enclosure can also be used inside.

HSB Test

SPEED SETTING NO LOAD - 14-KW (MODEL 100515)

Do NOT move forward until the HSB generator AC output voltage and frequency are correct and within the stated limits.

1. If the no-load voltage is correct but no-load frequency is incorrect, the engine governed speed requires adjustment.

   1a. Engine speed is normally set to 3750 RPM (62.5 HZ) high speed no load (HSNL)

   1b. Set engine speed with no electrical load on the generator

   1c. Use long needle nose pliers, or a long screw driver, to bend the spring anchor on the fixed speed controls.

   i. To increase engine speed HSNL bend the spring anchor tang on the fixed speed controls away from the governor lever to increase spring tension.

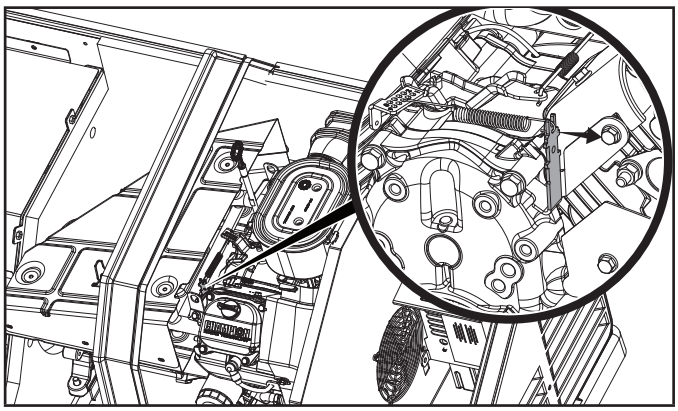

ii. To decrease engine speed HSNL bend the spring anchor tang on the fixed speed controls toward the governor lever to decrease spring tension.

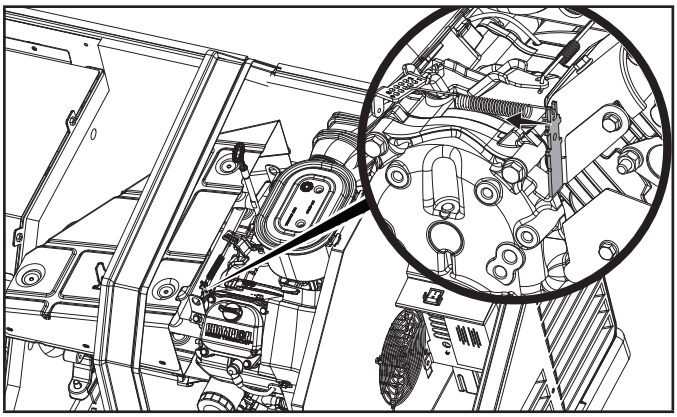

SPEED SETTING NO LOAD - 22-KW (MODEL 100304)

No speed adjustments are necessary as it's governed by an electronic speed controller.

⚠ DANGER

Proceed with caution. Once the Utility Power is turned ON, the ATS is now electrically hot. The feeder lines and terminals are now live.

Contact with these connections will result in extremely hazardous and possibly fatal electrical shock. Use the correct procedures as described in national electrical codes.

⚠ WARNING

The manufacturer recommends that a licensed electrician or an individual with complete knowledge of electricity perform these procedures.

ATS door opened and dead front removed as well as the HSB hood and electrical access panel removed for the following sections

1. Place aXis Controller® in the OFF position and remove aXis Controller® fuse.
2. Turn ON the utility power supply to the ATS.

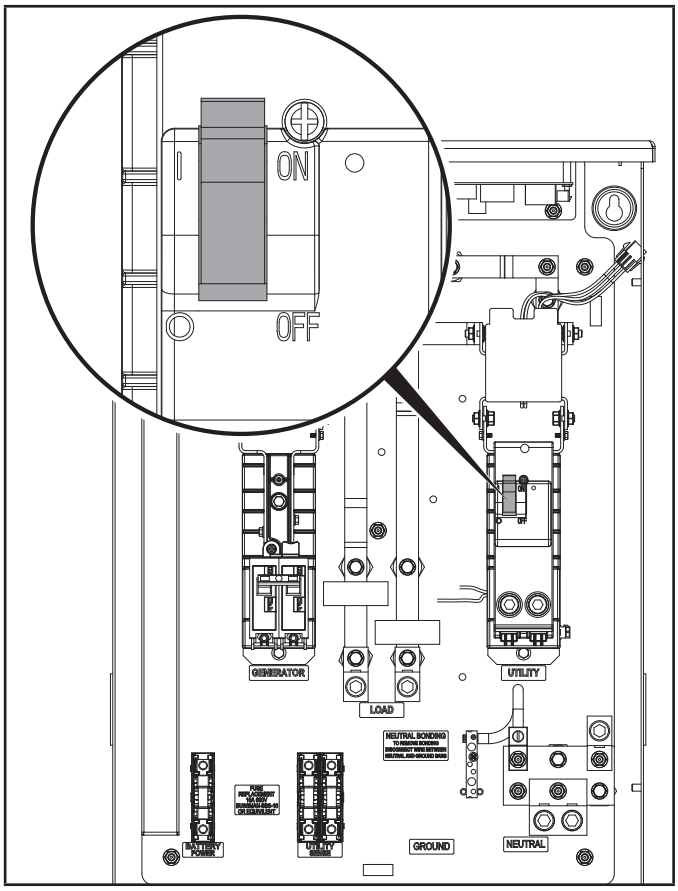

3. With an AC voltmeter, check for the correct voltage. Single-phase utility power supply. Measure across the UTILITY SUPPLY ATS terminal lugs L1 and L2. Also check L1 to NEUTRAL and L2 to NEUTRAL.
4. The utility supply voltage should be correct and compatible with the ATS ratings.
5. Turn OFF the utility power supply to the ATS.
6. The Control Panel MAIN CIRCUIT BREAKER must be in the OFF position.
7. Set the aXis Controller® in the MANUAL mode. The HSB will crank and start. Let the HSB warm up at no load for 5 minutes to stabilize performance.
8. Set the Control Panel MAIN CIRCUIT BREAKER in the ON position.

⚠ DANGER

Proceed with caution. HSB generator output voltage is now being delivered to the ATS and is electrically hot. The feeder lines and terminals are now live.

Contact with these connections will result in extremely hazardous and possibly fatal electrical shock

9. With an AC voltmeter, check the correct voltage. Single-phase generator supply.
10. Measure across GENERATOR SUPPLY ATS lugs L1 and L2. Also check L1 to NEUTRAL. These are factory, no load, pre-set limits.

Frequency ..... 62.5 Hertz
Terminals L1 to L2.....240 VAC
Terminals L1 to NEUTRAL.....120 VAC
Terminals L2 to NEUTRAL.....120 VAC

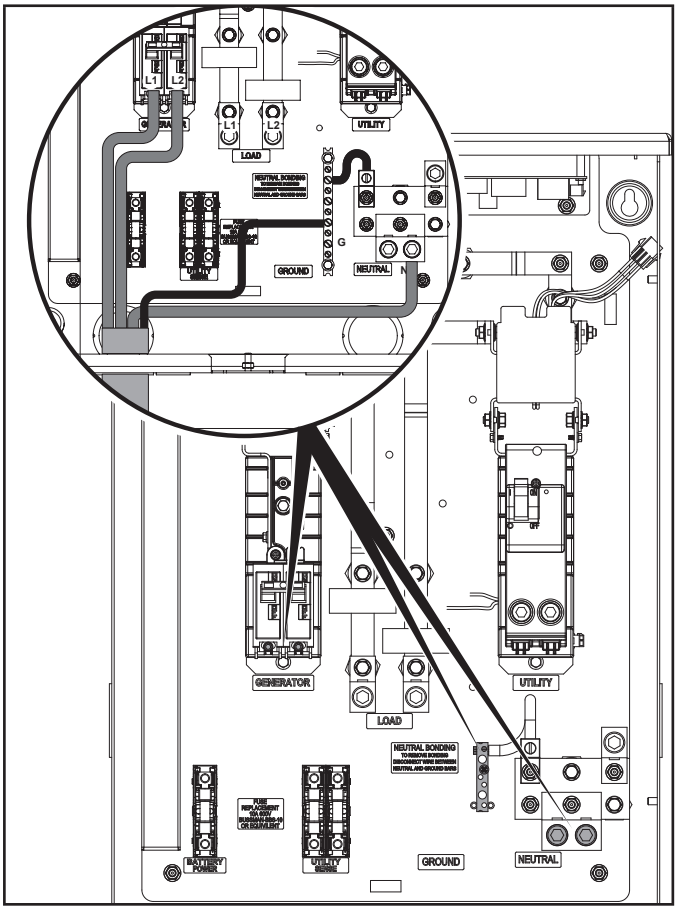

11. Set the HSB generator MAIN CIRCUIT BREAKER to its OFF position.
12. Set the aXis Controller® to the OFF position. This will shut off the HSB.

HSB TESTS UNDER LOAD

During this test you DO NOT need to turn off any circuit breakers in the Utility Main Distribution Panel, HSB Control Panel or the ATS.

This procedure will verify load Voltage and frequency output. Prior to starting the test you can place a Manometer in line to check fuel flow when the HSB is near rated load.

1. Remove ATS dead front.
2. Assure DIP switch #9 (TEST WITH LOAD is in the ON position.
3. Press TEST button.
4. The engine will start and the ATS will transfer.
5. The aXis Controller® screen will indicate that the generator is now suppling power to the home.

⚠ WARNING

The manufacturer recommends that a licensed electrician or an individual with complete knowledge of electricity perform these tests.

6. With rated load applied, check voltage and frequency across ATS GENERATOR SUPPLY terminals L1 and L2. Voltage must be greater than 216 Volts.
7. Frequency should be greater than 58 Hertz.
8. Verify that the gas pressure remains within the acceptable parameters as listed in the manual, provided that you placed a Manometer in line prior to starting this test.
9. In test mode, the HSB will run under load for 15 minutes at which time it will conclude the test and shut off automatically. With the unit running listen for unusual noises, inspect for vibrations or other unusual items that might reflect a problem.
10. To stop the test prior to automatic shut off, press the Test Button in the ATS a second time.
11. The HSB will run through a cool down cycle, shut down and return to standby mode.

The test is now complete and the system is in standby mode.

Checking Automatic Operation

To check the HSB system for proper automatic operation, proceed as follows:

1. Turn the ATS utility side breaker OFF.
2. Engine will start and the ATS will transfer.
3. Allow the system to go through a complete cycle. (Approximately 7 minutes)
4. To conclude Automatic Operation Check, turn the ATS utility side breaker ON.
5. The HSB will run through a cool down cycle, shut off, and return to standby mode.
6. Replace covers on ATS and HSB that were removed for HSB Test and Checking Automatic Operation. This check is now complete.

Installing Standby Generator to non-aXis Controller® ATS

NOTE: *This section is only for those looking to install their aXis Controller® HSB to a non-aXis Controller® ATS that supports a two-wire HSB start/stop signal. Please refer to the ATS installation manual for instructions on how to wire the ATS.*

If the aXis Controller® HSB is being connected to a non-aXis Controller® ATS, it will be necessary to use a two-wire connection shown below to control the on/off operation of this HSB. Note that this will disable some of the aXis Controller® features such as load management, WiFi connectivity, and wireless exercise programming.

TWO-WIRE CONNECTION

A two-wire connection refers to a signal circuit that runs between the non-aXis Controller® ATS and the HSB. When installed in this configuration, the HSB will turn on and off based on the signal it is receiving from the ATS.

The aXis Controller® HSB uses pin 2 and pin 11 on the back of the aXis Controller® to control two-wire starting. When pin 11 (normally 5VDC) is connected to pin 2 (ground), the generator will start and will continue to run until pin 11 is disconnected from pin 2 (ground). When pin 11 is disconnected from pin 2 (ground), the HSB will start the cool-down cycle and stop.

To wire the HSB to be controlled by the two-wire start signal, tap into the wires for pin 2 and pin 11 on the HSB and run them to a relay (not provided) that will close the circuit when the ATS wants the generator to run. Refer to the ATS instructions for the ATS logic on how to create the circuit.

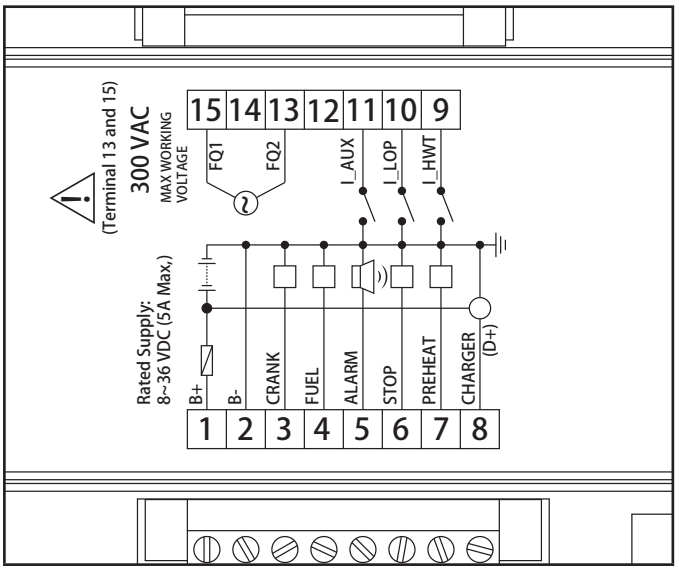

Customer Familiarization Summary

It's important to educate the home owner on proper maintenance, operation and service call procedures. A properly educated home owner can reduce unnecessary service trips and phone calls.

Ensure that the installation of the HSB and ATS has been correctly performed as outlined by the manufacturer and that it meets all applicable codes.

Test and confirm proper operation of the HSB and ATS system as outlined in the appropriate installation and owner's manuals.

Educate the home owner on the location and operation of;

Full flow shutoff valve

Automatic operation of the HSB system

Battery Charger and LED indicators

Exterior warning LED on the backside of the HSB

ATS operation

Exercise scheduled time of operation

Scheduled Maintenance

Fill out and provide the customer a copy of the HSB, ATS model & serial number reference. This information is extremely important for part purchases and service information, these numbers are specific to each HSB and ATS.

MAINTENANCE

Before performing maintenance procedures, review SAFETY section of your operator's manual.

Ensure that the ATS and generator ON/OFF switches (depending on model) are in the OFF position before performing any maintenance or cleaning.

Refer to "Resetting the maintenance hour meter" in the HSB operator manual for instructions after performing maintenance.

102006, 102007, 102008, 102009, 102010 ATS Wiring Diagram

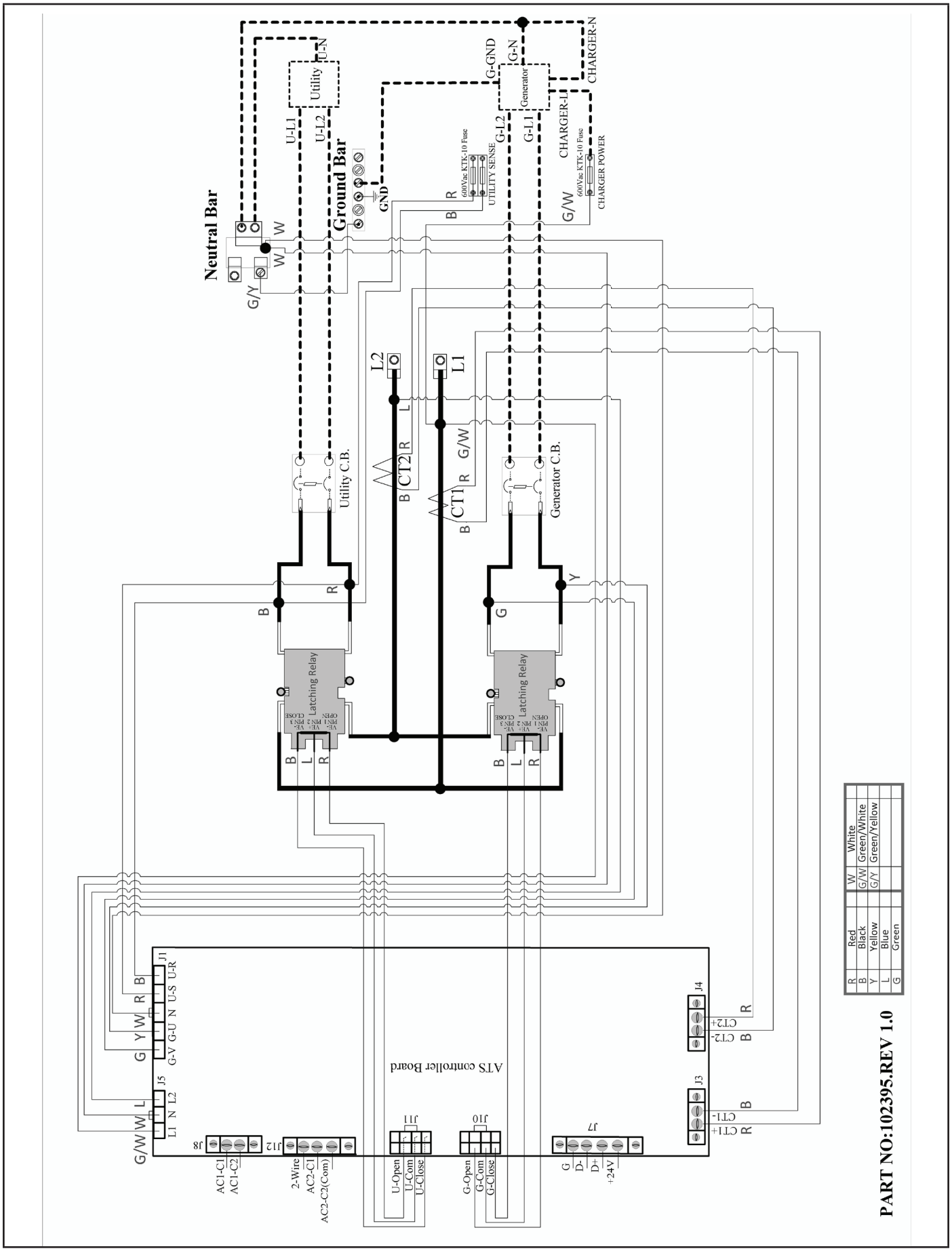

TROUBLESHOOTING HSB

Engine will not crank/turn over		
1	HSB set in “OFF” mode.	Place the HSB controllers in the AUTO position.
2	Battery not connected or loose, corroded posts or wires	Connect the batteries according to owner’s manual, clean and tighten the battery connections
3	Battery(s) not charged or low charge.	Recharge or replace battery(s).
4	Check for active fault code.	Identify fault code, correct and reset.
5	Defective starter solenoid *	
6	Defective starter *	
7	Generator ON/OFF switch is in the OFF position.	Check either single or dual generator ON/OFF switches are in the ON position (inside on 100515 and 100304, on the back for 100304).

Generator will crank/turn over but will not start		
1	Check for active fault code.	Identify fault code, correct and reset.
2	Fuel valve(s) turned off.	Turn on fuel supply.
3	Fuel pressure insufficient*.	Manometer check, confirm fuel pressure to fuel regulator*.
4	Weak battery(s).	Recharge or replace battery(s)
5	Low oil level.	Check for oil leaks. Check the oil level and add oil if necessary.
6	Spark plug wire is disconnected.	Connect spark plug wire.
7	Defective fuel solenoid/regulator. *	

Engine starts, runs rough		
1	Fuel pressure insufficient*.	Manometer check, confirm fuel pressure to fuel regulator*.
2	Wrong fuel jets.	Check jets for NG or LPG, change to correct Master Mixer fuel jets.
3	Faulty spark plug, loose spark plug wire.	Change spark plug, set gap, connect wire.
4	Plugged air cleaner	Clean or replace air cleaner.
5	Generator overloaded*.	Remove one or more loads*.
6	Shorted circuit *	

HSB starts, then suddenly stops		
1	Check for active fault code.	Identify fault code, correct and reset.
2	Fuel supply insufficient*	Manometer check, confirm fuel pressure to fuel regulator*.
3	Low oil, pressure shut down	Check for oil leaks. Check the oil level and add oil if necessary.
4	Generator over loaded	Turn off standby circuits for house, reset fault, place unit back into AUTO and ATS mode. Turn on standby circuits for house. If problem returns contact Champion or Champion service dealer*.
5	Engine high/over temperature shut down	Check all intake and exhaust ventilation around the HSB, remove all debris. Let HSB sit for 30 minutes to cool down.

No AC output		
1	Circuit breaker in “OFF” position	Turn on breaker.
2	Main circuit breaker in “OFF” position.	Turn on breaker.
3	Transfer switch breaker in “OFF” position.	Turn on breaker.
4	Standby breakers set in “OFF” position.	Turn on breaker.
5	Line circuit tripping breaker because of short circuit *	
6	Line circuit tripping breaker because of overload *	
7	Poor wiring connections*	
8	ATS problems*	

LED Indicators

In all cases when the GREEN icons are lit, this is an indicator that the HSB is performing properly.

In all cases when the RED icons are lit, this is an indicator that the HSB has registered a fault and must be corrected. Only the “LOW BATTERY” and “MAINTENANCE” icons will not latch out or shut down the HSB. All other RED icon faults will latch out, shut down, disable starting and light the RED icons on the aXis Controller® and the exterior warning LED on the backside of the HSB.

Reset fault code(s)

There is an exterior warning LED located on the back of the enclosure. This should be checked weekly to make sure there are no active fault codes.

The fault code(s) can be reset by placing the aXis Controller® in the OFF position for 10 seconds and then put the aXis Controller® in the previous position (either MANUAL or AUTO for example). This will reset fault icon, however if a fault code(s) re-occurs it must be addressed.

BATTERY(S) NO OR LOW LEVEL CHARGED, BATTERY(S) DEAD, NEEDS REPLACEMENT, THE EXERCISE TIME MUST BE RESET ONCE THE BATTERY(S) HAVE BEEN DISCONNECTED.

***Contact Champion Power Equipment, Technical Service toll free 1-877-338-0999, tech@championpowerequipment.com or your nearest Champion dealer.*

www.championpowerequipment.com

HSB, ATS Model & Serial Reference ATS Back-up Circuits

HSB Model Number _____

HSB Serial Number _____

Fuel Type LPG _____ NG _____

ATS Model Number _____

ATS Serial Number _____

ATS circuits powered _____

_____

_____

_____

_____

_____

_____

Date Installed _____

Dealer/Installer _____

Address _____

Phone _____

Cell _____

Purchased from _____

10 YEAR LIMITED WARRANTY*

Basic Warranty Provisions

Champion Air-Cooled 8.5kW – 22kW Home Standby Units USA and Canadian Models

For a period of 10 years or 2000 hours (whichever occurs first) from successful activation by an Authorized Champion Home Standby Dealer, Champion Power Equipment will, at its option, repair or replace any part(s) which upon examination, inspection and testing by Champion Power Equipment or an Authorized Champion Home Standby Dealer is found to be defective under normal use and service, in accordance with the Warranty Schedule set forth below.

Any equipment that the purchaser/owner claims to be defective must be examined by the nearest Authorized/Certified Champion Home Standby Service Dealer. This warranty applies only to Champion Power Equipment automatic standby generators used in "Standby" applications as Champion has defined Standby. Scheduled Maintenance, as outlined by the generator owner's manual is required. This Scheduled Maintenance should be performed by a knowledgeable, experience operator or an Authorized/Certified Champion Home Standby Service Dealer.

WARRANTY SCHEDULE

Years 1 and 2 – Limited comprehensive coverage on mileage, labor and parts

Years 3 through 10 – Limited comprehensive coverage on parts only

GUIDELINES:

- Warranty begins upon the successful activation of the unit.
- Unit should be Registered and Proof of Purchase and Maintenance must be available.
- Warranty is transferable between ownership of original installation site.
- Warranty only applies to permanently wired and mounted units.
- Any and all warranty repairs and/or concerns must be performed and/or addressed by an Authorized/Certified Champion Home Standby Service Dealer. Repairs or diagnostics performed by individuals other than Authorized/Certified Champion Home Standby Service Dealers not authorized in writing by Champion Power Equipment will not be covered.
- A Champion approved Transfer Switch is highly recommended to be used in conjunction with the generator set. The Champion Transfer Switch is covered under its own, separate warranty listed in the Transfer Switch Instruction Manual and is not covered under this warranty schedule.
- If a Non-Champion approved Transfer Switch is substituted for use and directly causes damage to the generator set, no warranty coverage shall apply.
- Steel enclosures are warranted against rusting for the first year of ownership only. Damage caused after receipt of generator is the responsibility of the owner and is not covered by this warranty. Nicks, scrapes, dents or scratches to the painted enclosure should be repaired promptly by the owner.
- All warranty expense allowances are subject to the conditions defined in Champion Power Equipment "Home Standby" Warranty Policy and Procedures Manual.

THIS WARRANTY SHALL NOT APPLY TO THE FOLLOWING:

- Original installation or start-up costs
- Champion Home Standby generators that utilize non-Champion Power Equipment replacement parts
- Costs of normal maintenance (i.e. tune-ups, associated part(s), adjustments, loose/leaking clamps, installation and start-up)
- Units sold, rated or used for "Prime Power", "Trailer Mounted" or "Rental Unit" applications
- Damage to generator system (including transfer switch) caused by improper installation or costs necessary to correct installation
- Units used for Prime Power in place of existing utility power (where utility power is present) or in place of utility power where utility power service does not normally exist. Prime power includes any application that does not use the utility grid for electric power (example: Solar power)
- Fuel connections other than conventional utility company supplied natural gas systems or conventional LP vapor withdrawal systems
- Any failure caused by contaminated fuels, oils or lack of proper fuels, oils or failure to perform scheduled maintenance and service the air filter
- Steel enclosures that are rusting due to the improper installation, location in a harsh or saltwater environment or scratched where integrity of paint applied is compromised
- Failures due, but not limited, to normal wear and tear, accident, misuse, abuse, negligence or improper installation. As with all mechanical devices, the Champion engines need periodic part(s) service and fluid replacement to perform as designed.
- Failures caused by any external cause or act of God, such as collision, theft, vandalism, riot or wars, nuclear holocaust, fire, freezing, lightning, earthquake, windstorm, hail, volcanic eruption, water or flood, tornado or hurricane
- Damage related to rodent and/or insect infestation
- Covered warranty labor rates are based on normal working hours. Overtime, holiday, or emergency labor costs for repairs outside of normal business hours will be the responsibility of the customer

– Any incidental, consequential or indirect damages caused by defects in materials or workmanship, or any delay in repair or replacement of the defective part(s)
– Failure due to misapplication to provide sufficient cooling air and to regularly exercise the generator under load
– Telephone, cellular phone, facsimile, internet access or other communication expenses
– Living or travel expenses of person(s) performing service, except as specifically included within the terms of a specific unit warranty period
– Expenses related to “customer instruction” or troubleshooting where no manufacturing defect is found
– Rental equipment used while warranty repairs are being performed and/or overnight freight costs for replacement part(s)
– Costs incurred for equipment used for removal and/or reinstallation of generator, (i.e.: cranes, hoists, lifts, etc.)
– Planes, ferries, railroad, buses, helicopters, snowmobiles, snow-cats, off-road vehicles or any other mode of transport deemed abnormal
– Starting batteries, fuses, light bulbs, engine fluids, and spark plugs

THIS WARRANTY AND THE ATTACHED U.S. EPA WARRANTY ARE IN LIEU OF ALL OTHER WARRANTIES, EXPRESS OR IMPLIED, INCLUDING WARRANTIES OF MERCHANTABILITY OR FITNESS FOR A PARTICULAR PURPOSE.

Any implied warranties which are allowed by law, shall be limited in duration to the terms of the express warranty provided herein. Some states do not allow limitations on how long an implied warranty lasts, so the above limitation may not apply to purchaser/owner.

CHAMPION POWER EQUIPMENT’S ONLY LIABILITY SHALL BE THE REPAIR OR REPLACEMENT OF PART(S) AS STATED ABOVE. IN NO EVENT SHALL CHAMPION POWER EQUIPMENT BE LIABLE FOR ANY INCIDENTAL, OR CONSEQUENTIAL DAMAGES, EVEN IF SUCH DAMAGES ARE A DIRECT RESULT OF CHAMPION POWER EQUIPMENT’S NEGLIGENCE.

Some states do not allow the exclusion or limitation of incidental or consequential damages, so the above limitations may not apply to purchaser/owner. Purchaser/owner agrees to make no claims against Champion Power Equipment based on negligence. This warranty gives purchaser/owner specific legal rights. Purchaser/owner also may have other rights that vary from state to state.

To obtain warranty service or your nearest Champion Home Standby Dealer call Champion Power Equipment Customer Service toll free 1-877-338-0999.

Contact Information

Address

Champion Power Equipment, Inc.

Customer Service
6370 S Pioneer Way, Unit 101
Las Vegas, NV 89113 USA
www.championpowerequipment.com

Customer Service and Techinical Support

Toll Free: 1-877-338-0999
hsb@cpeauto.com
Fax no.: 1-562-236-9429

*Except as otherwise stipulated in any of the following enclosed Emission Control System Warranties (when applicable) for the Emission Control System: U.S. Environmental Protection Agency (EPA) and/or California Air Resources Board (CARB).