OPERATOR'S MANUAL

MODEL #100534
24 IN. 2-STAGE SNOWBLOWER

REGISTER YOUR PRODUCT ONLINE

at **championpowerequipment.com**

1·877·338·0999

or visit **championpowerequipment.com**

READ AND SAVE THIS MANUAL. This manual contains important safety precautions which should be read and understood before operating the product. Failure to do so could result in serious injury. This manual should remain with the product.

Specifications, descriptions and illustrations in this manual are as accurate as known at the time of publication, but are subject to change without notice.

REV 20220706

Champion Power Equipment, Inc., Santa Fe Springs, CA USA

TABLE OF CONTENTS

Introduction 3

Safety Definitions 3

Important Safety Instructions 4

Fuel Safety 4
Training 5
Preparation For Use 5
Operation 6
Clearing a Clogged Discharge Chute 6
Maintenance and Storage 6
Safety Labels 7
Safety Symbols 8
Operation Symbols 10
Quickstart Label Symbols 11

Controls and Features 12

Snowblower 12
Engine 12
Parts Included 13

Assembly 14

Unpacking 14
Handle 14
Add Engine Oil 15
Add Fuel 16

Operation 17

Before Operation 17
Check the Engine 17
Starting the Engine 17
Stopping the Engine 18
Operation at High Altitude 18
Control Levers 19
Adjusting the Snow Discharge Direction and Height 20
Clearing a Clogged Discharge Chute 20
Adjusting the Snow Shoes 20
Power Turn Steering Technology 20
After Use 21

Maintenance 21

Engine Maintenance 21
Oil Change 21
Replacing Shear Pins 22
Adjusting Self-Drive Control Handle Cable 22
Adjusting Self-Drive Speed Control Handle Cables 22
Adjusting Auger Control Cable 24
Adjusting Discharge Chute Cables 24
Replace Discharge Chute Deflector Cable 25
Replace Self-Drive Control Handle Cable 26
Replace Auger Belt 27
Repair or Replace Friction Disc 29
Replace Shift Fork Steering Assembly 31
Valve Clearance 32
Lubrication 32
Long-Term Storage 32
Transporting 32
Regular Service Periods 32

Specifications 33

Snowblower Specifications 33
Engine Specifications 33
Oil Specifications 33
Fuel Specifications 33

Troubleshooting 34

INTRODUCTION

Congratulations on your purchase of a Champion Power Equipment (CPE) product. CPE designs, builds, and supports all of our products to strict specifications and guidelines. With proper product knowledge, safe use, and regular maintenance, this product should bring years of satisfying service.

Every effort has been made to ensure the accuracy and completeness of the information in this manual at the time of publication, and we reserve the right to change, alter and/or improve the product and this document at any time without prior notice.

Since CPE highly values how our products are designed, manufactured, operated and are serviced, and also highly value your safety and the safety of others, we would like you to take the time to review this product manual and other product materials thoroughly and be fully aware and knowledgeable of the assembly, operation, dangers and maintenance of the product before use. Fully familiarize yourself, and make sure others who plan on operating the product fully familiarize themselves too, with the proper safety and operation procedures before each use. Please always exercise common sense and always err on the side of caution when operating the product to ensure no accident, property damage, or injury occurs. We want you to continue to use and be satisfied with your CPE product for years to come.

When contacting CPE about parts and/or service, you will need to supply the complete model and serial numbers of your product. Transcribe the information found on your product's nameplate label to the table below

CPE TECHNICAL SUPPORT TEAM
1-877-338-0999
MODEL NUMBER
100534
SERIAL NUMBER
DATE OF PURCHASE
PURCHASE LOCATION

SAFETY DEFINITIONS

The purpose of safety symbols is to attract your attention to possible dangers. The safety symbols, and their explanations, deserve your careful attention and understanding. The safety warnings do not by themselves eliminate any danger. The instructions or warnings they give are not substitutes for proper accident prevention measures.

⚠ DANGER

DANGER indicates a hazardous situation which,if not avoided, will result in death or serious injury.

⚠ WARNING

WARNING indicates a hazardous situation which, if not avoided, could result in death or serious injury.

⚠ CAUTION

CAUTION indicates a hazardous situation which, if not avoided, could result in minor or moderate injury.

NOTICE

NOTICE indicates information considered important, but not hazard-related (e.g., messages relating to property damage).

IMPORTANT SAFETY INSTRUCTIONS

⚠ WARNING

Cancer and Reproductive Harm – www.P65Warnings.ca.gov

⚠ DANGER

Engine exhaust contains carbon monoxide, a colorless, odorless, poison gas. Breathing carbon monoxide will cause nausea, dizziness, fainting or death. If you start to feel dizzy or weak, get to fresh air immediately.

Operate product outdoors only in a well ventilated area.

DO NOT operate the product inside any building, including garages or sheds.

DO NOT allow exhaust fumes to enter a confined area through windows, doors, vents or other openings.

⚠ DANGER

Using an engine indoors **CAN KILL YOU IN MINUTES**. Engine exhaust contains carbon monoxide. This is a poison you cannot see or smell.

NEVER use inside a home or garage, **EVEN IF** doors and windows are open.

ONLY use **OUTSIDE** and far away from windows, doors, and vents.

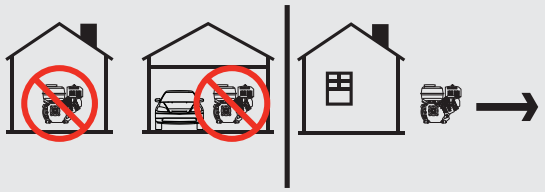

Install battery-operated carbon monoxide alarms or plug-in carbon monoxide alarms with battery back-up according to the manufacturer's instructions.

⚠ DANGER

Rotating parts can entangle hands, feet, hair, clothing and/or accessories. Traumatic amputation or severe laceration can result.

Keep hands and feet away from rotating parts.

Tie up long hair and remove jewelry.

Operate equipment with guards in place.

DO NOT wear loose-fitting clothing, dangling drawstrings or items that could become caught.

⚠ WARNING

Sparks can result in fire or electrical shock.

When servicing the engine:

Disconnect the spark plug wire and place it where it cannot contact the plug.

DO NOT check for spark with the plug removed.

Use only approved spark plug testers.

⚠ WARNING

Running engines produce heat. Severe burns can occur on contact. Combustible material can catch fire on contact.

DO NOT touch hot surfaces.

Avoid contact with hot exhaust gases.

Allow equipment to cool before touching.

Fuel Safety

⚠ DANGER

GASOLINE AND GASOLINE VAPORS ARE HIGHLY FLAMMABLE AND EXPLOSIVE.

Fire or explosion can cause severe burns or death.

Gasoline and gasoline vapors:

- Gasoline is highly flammable and explosive.
- Gasoline can cause a fire or explosion if ignited.
- Gasoline is a liquid fuel but it's vapors can ignite.
- Gasoline is a skin irritant and needs to be cleaned up immediately if spilled on skin or clothes.
- Gasoline has a distinctive odor, this will help detect potential leaks quickly.
- Gasoline expands or contracts with ambient temperatures. Never fill the gasoline tank to full capacity, as gasoline needs room to expand when temperatures rise.
- In the case of any petroleum gasoline fire, flames should never be extinguished unless the fuel supply valve can be turned OFF. By not doing so, if a fire is extinguished and the supply of fuel is not turned OFF, an explosion hazard could be created.

When adding or removing gasoline:

- DO NOT light or smoke cigarettes.
- Turn the snowblower off and let cool for a minimum of two minutes before removing the gasoline cap. Loosen gasoline cap to relieve pressure from the gasoline tank.

- Only fill or drain gasoline outdoors in a well-ventilated area.
- DO NOT pump gasoline directly into the snowblower at the gas station. Always use an approved fuel container to transfer the gasoline to the snowblower.
- DO NOT overfill the gasoline tank. Keep fuel level at least ½ inch below bottom of filler neck to provide space for fuel expansion.
- Never remove gas cap or add fuel while the engine is hot or running.
- When gasoline spills, wipe the fuel off the engine and equipment. Move the snowblower from fuel spill area to another area.
- Wait 5 minutes before starting the engine.
- Always keep gasoline away from sparks, open flames, pilot lights, heat and other sources of ignition.

When starting the engine:

- DO NOT attempt to start a damaged snowblower.
- Always make certain that the gasoline cap, air filter, spark plug, fuel lines and exhaust system are properly secured, connected and in place.
- Always allow spilled gasoline to evaporate fully before attempting to start the engine.
- Make certain that the snowblower is resting firmly on level ground.

When operating the snowblower:

- DO NOT tip the snowblower during operation.
- DO NOT tip the snowblower or allow fuel or oil to spill.

When transporting or servicing the snowblower:

- Make certain that the fuel valve is in the OFF position and the gasoline tank is empty.
- Disconnect the spark plug wire.

When storing the snowblower:

- Store away from sparks, open flames, pilot lights, heat and other sources of ignition.
- Do not store the snowblower or gasoline near furnaces, water heaters, or any other appliances that produce heat or have automatic ignitions.

⚠ WARNING

Never use a gasoline container, gasoline tank, or any other fuel item that is broken, cut, torn or damaged.

Training

1. Read the Operator's Manual completely before attempting to use the snowblower. Be thoroughly familiar with the controls and the proper use of the equipment. Know how to stop the engine and disengage the controls quickly.
2. Never allow children under 16 years old to operate the equipment. Never allow adults to operate the equipment without proper instruction.
3. Thrown objects can cause serious injury. Keep the area of operation clear of all persons, particularly small children, and pets. Plan your snow discharge pattern to prevent throwing material toward cars, structures, roads and people.
4. Exercise caution to avoid slipping or falling, especially when operating in reverse.
5. Be aware that the operator or user is responsible for accidents or hazards occurring to other people or their property.
6. Never use the snowblower under the influence of alcohol or medication, or if you are tired or ill.

Preparation For Use

1. Be thoroughly familiar with the controls and the proper use of the equipment. Understand and know how to stop the engine and disengage the controls quickly.
2. Thoroughly inspect the area where the equipment is to be used and remove all doormats, sleds, boards, wires, and other foreign objects.
3. Disengage all clutch handles before starting the motor.
4. Do not operate the equipment without wearing adequate winter garments. Wear footwear which will improve footing on slippery surfaces.
5. Adjust the auger housing height to clear gravel or crushed rock surface.
6. Never attempt to make any adjustments while the engine is running (except where specifically recommended in the manual).
7. Let engine and machine adjust to outdoor temperatures before starting to clear snow.
8. The operation of any powered machine can result in foreign objects being thrown into the eyes. Always wear eye protection with side shields marked to comply with ANSI Z87.1 during operation, or while performing an adjustment or repair.
9. Inspect the auger and impeller before starting to ensure that there is no ice build up.

Operation

1. Do not put hands or feet near or under rotating parts. Keep clear of the discharge opening at all times.
2. Exercise extreme caution when operating on or crossing gravel drives, walks, or roads. Stay alert for hidden hazards or traffic.
3. In the event of striking a foreign object, stop the engine, remove the spark plug, thoroughly inspect the snowblower for any damage, and repair the damage before restarting and operating the snowblower.
4. If the snowblower should start to vibrate abnormally, stop the engine and check immediately for the cause. Vibration is generally a warning of trouble. Vibration typically indicates a mechanical problem has occurred.
5. Always stop the engine whenever you leave the operating position, before unclogging the auger housing or discharge guide, and when making any repairs, adjustments, or inspections.
6. Before cleaning, inspecting or repairing any parts of the snowblower, always ensure the auger has stopped moving. Disconnect the spark plug wire and keep it away from the plug to prevent accidental starting.
7. Before leaving the machine unattended, disengage all control levers, stop the engine and remove the safety key.
8. Do not run the engine indoors. Exhaust fumes are dangerous and can kill you.
9. Do not clear snow across the face of slopes. Exercise extreme caution when changing direction on slopes. Never attempt to clear steep slopes.
10. Never operate the snowblower without proper guards, plates or other safety protective devices in place.
11. Never operate the snowblower near glass enclosures, automobiles, window wells, etc., without proper adjustment of the snow discharge angle. Keep children and pets away.
12. Do not overload the machine capacity by attempting to clear snow at too fast a rate.
13. Never operate the machine at high transport speeds on slippery surfaces. Use care when reversing.
14. Never direct discharge at bystanders or allow anyone in front of the unit.
15. Disengage power to the impeller when snowblower is transported or not in use.
16. Use only attachments and accessories approved by the manufacturer of snowblower (such as wheel weights, counterweights, cabs, etc.).
17. Never operate the snowblower without good visibility or light. Always be sure of your footing, and keep a firm hold on the handles. Walk; never run.
18. Keep all nuts, bolts and screws tight to be sure the equipment is in safe working condition prior to operation.
19. Replace worn or damaged parts for safety; Use only genuine replacement parts and accessories.
20. This snowblower is not intended for use by persons (including children) with reduced physical, sensory or mental capabilities, or lack of experience and knowledge of mechanical equipment.
21. Be careful while working on the machine or clearing a blockage in the auger or impeller to ensure that fingers and hands do not become crushed or cut.
22. Do not touch hot engine components like the muffler, muffler guard or engine block during operation of the snowblower as they will cause burns.
23. Should the unit stop discharging snow for any reason, release the controls to stop the auger and the engine before inspecting for any lodged items or damaged parts in the auger housing.

Clearing a Clogged Discharge Chute

⚠ DANGER

DO NOT use your hands to clean out the discharge chute.

To clear the chute:

1. SHUT THE ENGINE OFF!
2. Wait 10 seconds to be sure the auger blades have stopped rotating.
3. Always use the provided clean-out tool to clear out the discharge chute.

Maintenance and Storage

1. Check shear bolts, engine mounted bolts, etc., at frequent intervals for proper tightness to ensure the equipment is in safe, working condition.
2. Never store the machine with gasoline in the fuel tank inside a building where automatic ignition sources are present such as hot water heaters, space heaters, clothes dryers or any open flame sources.
3. Run the snowblower for one minute to clear out packed snow and ice to prevent freeze-up prior to storage.
4. Always allow the engine to cool before storing in any enclosure.
5. Always refer to Operator's Manual for important details when the snowblower is to be stored for extended periods of time.
6. Maintain or replace safety and instructions labels, as necessary.

Safety Labels

These labels warn you of potential hazards that can cause serious injury. Read them carefully.

If a label comes off or becomes hard to read, contact Technical Support Team for possible replacement.

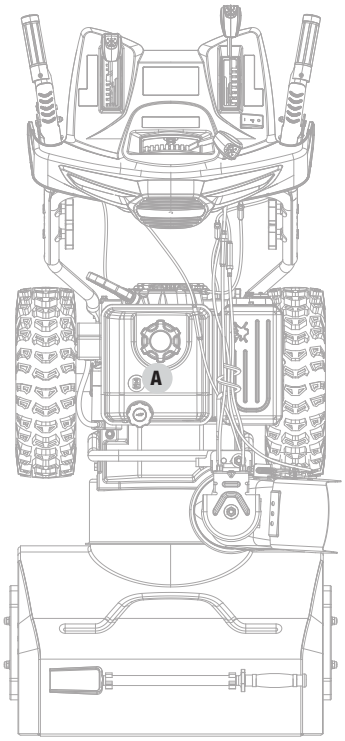

Top

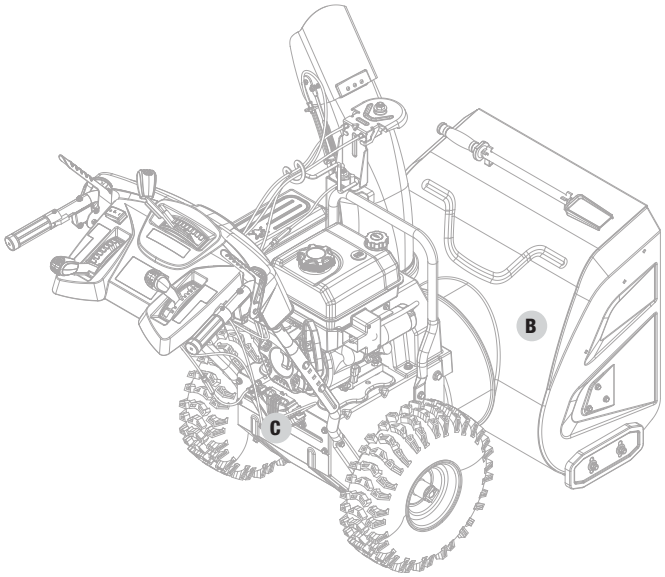

Back

	LABEL	DESCRIPTION
A	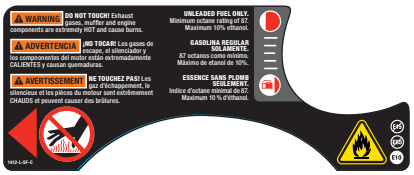	Hot Surface/Fuel
B		Safety Icons
C	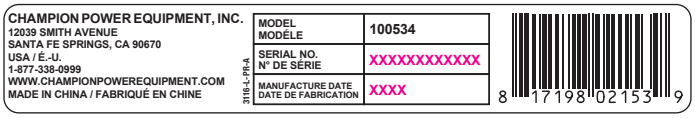	Dataplate

Safety Symbols

Some of the following symbols may be used on this product. Please study them and learn their meaning. Proper interpretation of these symbols will allow you to more safely operate the product.

SYMBOL	MEANING
	Read Operator's Manual. To reduce the risk of injury, user must read and understand operator's manual before using this product.
	Eye and Ear Protection. Always wear safety goggles or safety glasses with side shields, and as necessary a full face-shield as well as full ear protection when operating this product. Always wear eye protection with side shields marked to comply with ANSI Z87.1.
	Safety Alert. This machine was built to be operated according to the safe operation practices in this manual. As with any type of power equipment, carelessness or error on the part of the operator can result in serious injury. This machine is capable of amputating fingers, hands, toes and feet and throwing foreign objects. Failure to observe the safety instructions could result in serious injury or death.
	Electric Shock. Failure to use in dry conditions and to observe safe practices can result in electric shock. Improper connections to a building can allow current to backfeed into utility lines, creating an electrocution hazard. A transfer switch must be used when connecting to a building.
	Fire/Explosion. Fuel and its vapors are extremely flammable and explosive. Fire or explosion can cause severe burns or death. Operation of this equipment may create sparks that can start fires around dry vegetation. A spark arrestor may be required. The operator should contact local fire agencies for laws or regulations relating to fire prevention requirements.
	Toxic Fumes. The engine exhaust from this product contains chemicals known to cause cancer, birth defects and other reproductive harm. **Risk of Asphyxiation.** This engine emits carbon monoxide, an odorless, colorless poison gas. Breathing carbon monoxide can cause nausea, fainting or death. Use only in a well-ventilated area.
	Thrown Objects. This machine may pick up and throw objects which can cause serious personal injury.
	Always Use Chute Tool. Never use your hands to clear a clogged chute assembly. Shut OFF engine and remain behind handles until all moving parts have stopped before unclogging.

SYMBOL	MEANING
	Hot Surface. To reduce the risk of injury or damage, avoid contact with any hot surface.
	Open Flame Alert. Fuel and its vapors are extremely flammable and explosive. Keep fuel away from smoking, open flames, sparks, pilot lights, heat, and other ignition sources.
	Rotating Auger. DANGER: Avoid injury from rotating auger - keep feet away.
	Rotating Blades. Never put your hand in the chute. Contact with rotating parts can amputate fingers and hands.

Operation Symbols

Some of the following symbols may be used on this product. Please study them and learn their meaning. Proper interpretation of these symbols will allow you to more safely operate the product.

SYMBOL	MEANING
	Choke / Run
	Throttle: Full Speed / Low Speed
	Self-Drive Control Handle
	Activate Self-Drive/Auger
	Stop Self-Drive/Auger
	Auger Operation
	Forward/Reserve Drive

SYMBOL	MEANING
	Discharge Direction
	Insert Engine Key
	Remove Engine Key
3-5×	Cold Prime
	Warm Prime
	Fuel Valve: OFF / ON
	Gasoline Tank: Full
	Gasoline Tank: Empty

Quickstart Label Symbols

Some of the following symbols may be used on this product. Please study them and learn their meaning. Proper interpretation of these symbols will allow you to more safely operate the product.

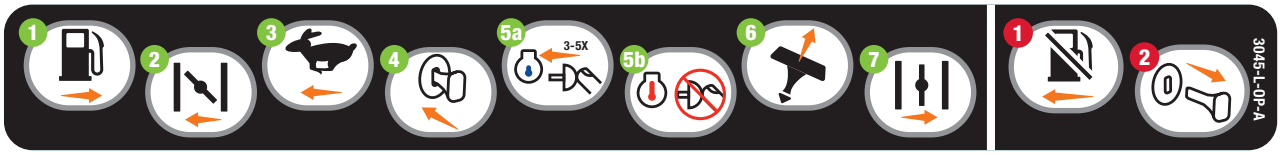

Starting the Engine

1. Turn fuel valve **"ON"** position.
2. Move choke lever to **"CHOKE"** position.
3. Move the throttle lever to **"FULL"** speed to start the engine.
4. Make sure the engine safety key is inserted into the key hole.
5. Priming the Engine

   5a. To start the COLD engine: Prime 3-5 times.

   5b. To start a WARM engine: DO NOT prime.
6. Pull the recoil started to start the engine.
7. Move the choke lever to **"RUN"** position.

Stopping the Engine

1. Turn fuel valve **"OFF"** position.
2. Remove the engine key.

CONTROLS AND FEATURES

Read this operator's manual before operating your snowblower. Familiarize yourself with the location and function of the controls and features. Save this manual for future reference.

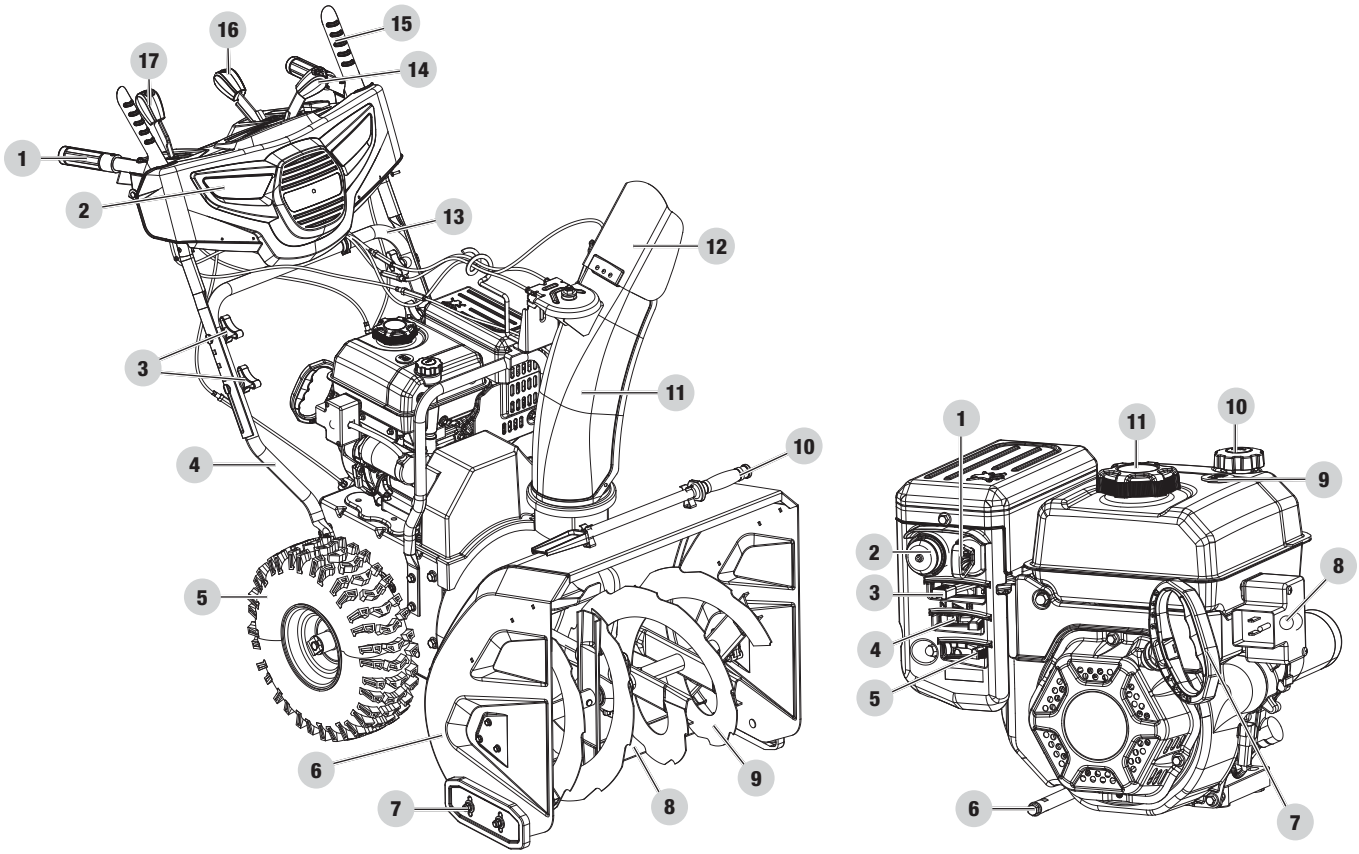

Snowblower

1. Auger Control Handle
2. Lights
3. Handle Locking Knobs
4. Lower Handle
5. Wheels
6. Auger Housing
7. Skid Shoes
8. Shave Plate
9. Auger
10. Clean Out Tool
11. Discharge Chute
12. Discharge Chute Deflector
13. Upper Handle
14. Discharge Chute Rotation Lever
15. Self-Drive Control Lever
16. Discharge Chute Deflector Lever
17. Speed Control Lever

Engine

1. Key (safety lock out)
2. Primer Bulb
3. Throttle Lever
4. Choke Lever
5. Fuel Valve (On/Off)
6. Oil Drain Plug
7. Recoil Starter Grip
8. Electric Start Button
9. Fuel Level Gauge
10. Oil Fill and Level Check Cap
11. Fuel Cap

Parts Included

Accessories

6 ft. (1.8 m) Electric Start Power Cord 1
Engine Oil ..... 16.9 fl. oz. (500 ml)
Chute Clearing Tool 1
B Clip and Sheer Pins (spare parts) 4

Tools

13mm × 16mm Double Open End Wrench 1

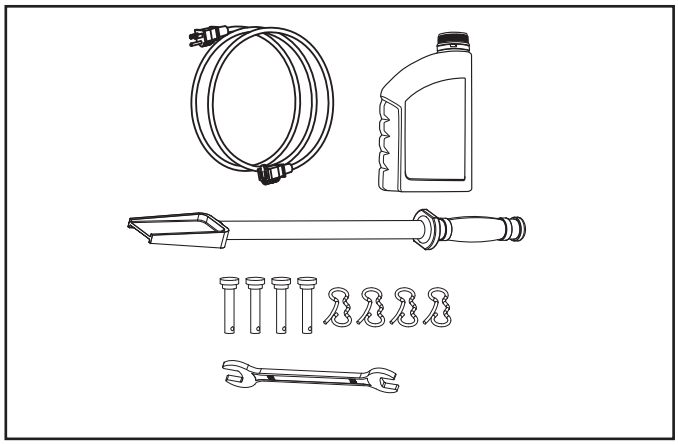

Assembly Parts

Part	Part Qty.	Hardware Needed	Hardware Qty.	Hardware Reference	Tool Needed
Discharge Chute	1	M10 Hexagon Lock Nut	1	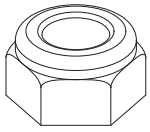	16mm Wrench
		Large Washer	1	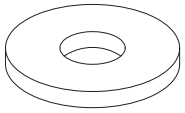	N/A
		Support Rod	1	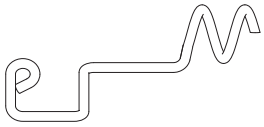	N/A
Lower Handle	1	M8×16 Self-tapping Bolt	4	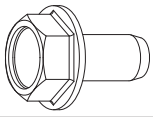	13mm Wrench
		Cord Clamp (preassembled)	1		N/A
Upper Handle	1	M8×50 Half Round Bolt	4		N/A
		Curved washer	4		
		Rotating knob	4		
		Cable Tie	3		

ASSEMBLY

Your snowblower requires some assembly. This unit ships from our factory with oil. It must be properly serviced with fuel and oil before operation.

If you have any questions regarding the assembly of your snowblower, call our Technical Support Team at 1-877-338-0999. Please have your serial number and model number available.

Unpacking

1. Set the shipping carton on a solid, flat surface.
2. Remove everything from the carton except the snowblower base — including upper and lower handles, connecting levers, chute, hardware, etc. Make sure all the assembly parts are included before you start.
3. Lift the top half of the box off and the base should be clear to start assembly.
4. Cut down the bottom carton to allow a flat surface area to install the assembly parts without scratching parts or cutting tires. Alternatively, with team lift help, lift the base of the snowblower out of the carton and place it on a flattened carton to start assembly.

Handle

1. Attach the lower handle (1-1) onto the unit body with 4 self-tapping bolts (1-2) using included tool or your own 13mm wrench (Fig. 1).

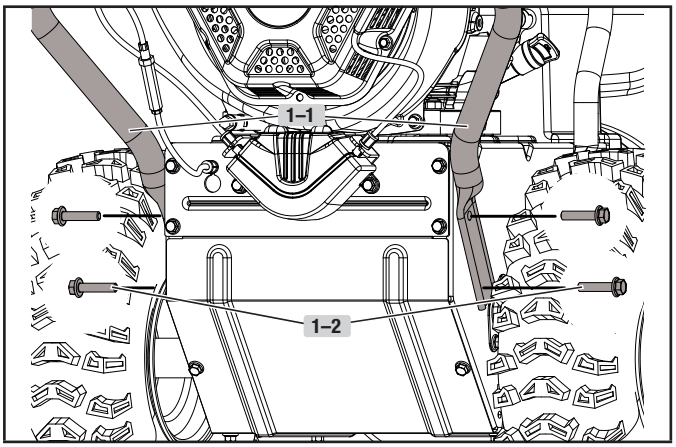

Figure 1

2. Connect the upper and lower handle with bolts (2-1), washers (2-2) and locking knobs (2-3) (Fig. 2). The top handle can adjust to 4 positions. You can come back later and adjust to a more comfortable height.

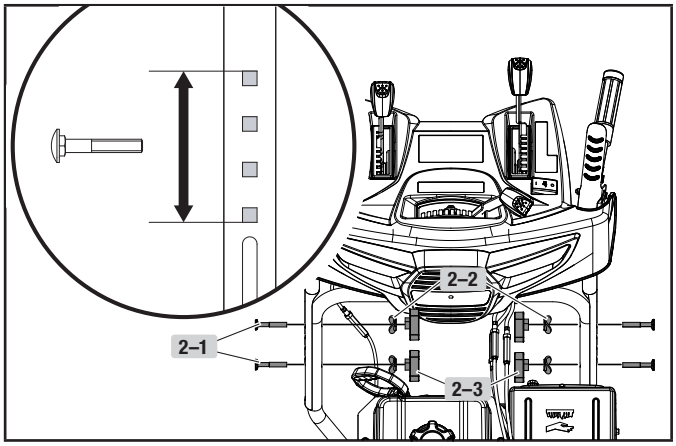

Figure 2

3. Remove the chute pivot assembly (3-1) from the bubble wrap and attach to the bracket on the chute (3-2). Align the round and square connector on the underside of the chute pivot assembly to the bracket. The square connector snaps in place. Then, place the entire chute (3-3) over the two posts (3-4) aligning the chute with the base (3-5). The chute will just rest on the base and rotate at this point (Fig. 3).

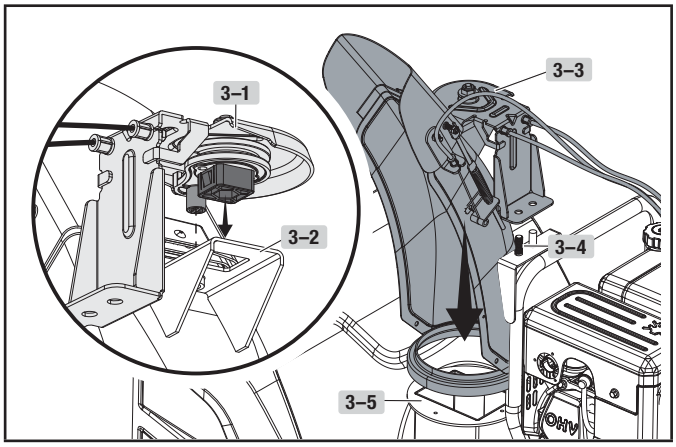

Figure 3

4. Put the snow discharge chute cable wire form on the snow discharge support using the washer (4-1) and nut (4-2). Securely tighten the assembly (Fig. 4) using included tool or your own 16mm wrench. This will be the guide that channels all the cables over the engine from the chute area.

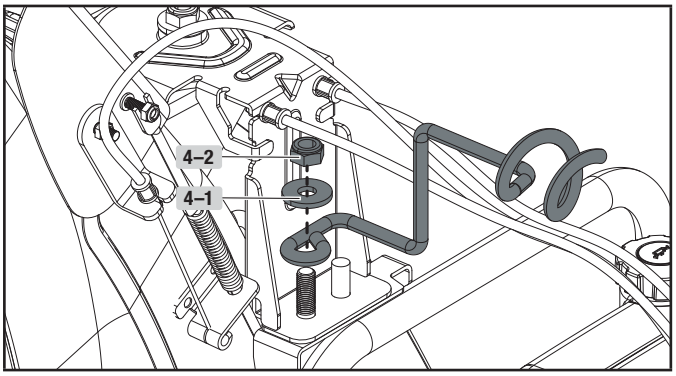

Figure 4

5. Route the cables through the support rod wire form (5-1) and cord clamp (5-2) on the lower handle. Additional cable ties are included to neaten up the cables. Keep loose before first use and adjust. When comfortable all the cabling is in proper position, tighten up the cable ties (Fig. 5).

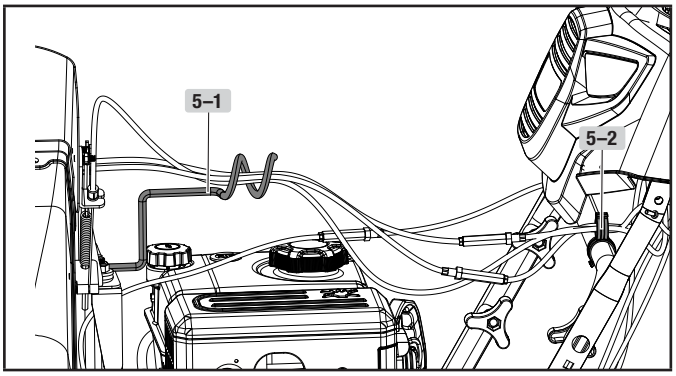

Figure 5

Add Engine Oil

⚠ WARNING

DO NOT attempt to crank or start the engine before it has been properly filled with the recommended type and amount of oil. Damage to the snowblower as a result of failing to follow these instructions will void your warranty.

NOTICE

The snowblower rotor has a sealed, pre-lubricated ball bearing that requires no additional lubrication for the life of the bearing.

NOTICE

The recommended oil type for typical use is **0W-30 automotive oil**.

If running snowblower in extreme temperatures, refer to the following chart for recommended engine oil type.

Recommended Engine Oil Type				
	0W-30 / 5W-30			
°F	-20	0	20	40
°C	-28.9	-17.8	-6.7	4.4
Ambient temperature				

1. Place the snowblower on a flat, level surface.
2. Remove the oil cap/dipstick (6-1) and wipe it clean (Fig. 6A).

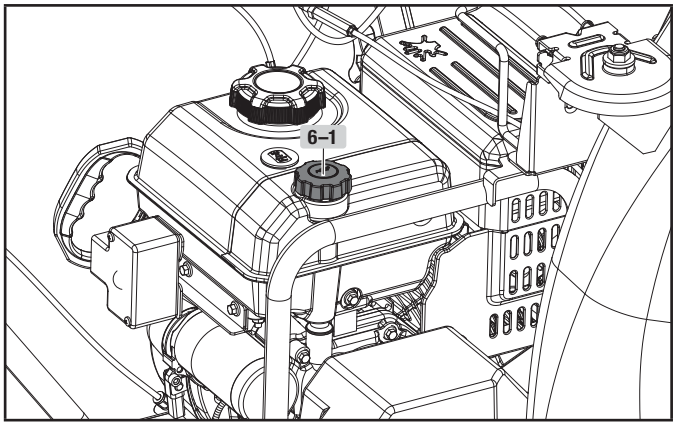

Figure 6A

3. Insert the oil cap/dipstick into the oil filler neck but do not screw it in, then remove it to check the oil level (Fig. 6B).

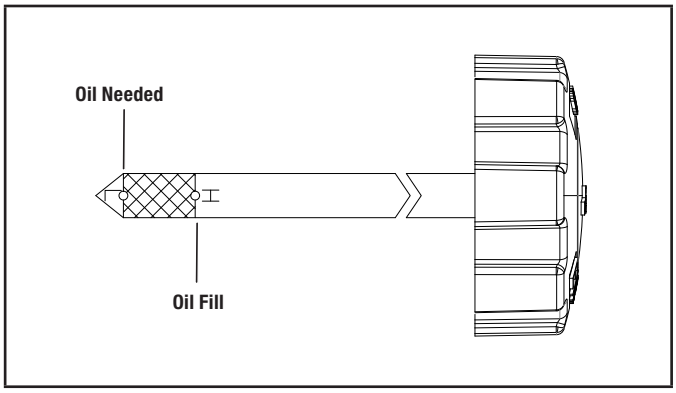

Figure 6B

4. If the oil level is near or below the lower limit mark on the dipstick, remove the oil cap/dipstick, and fill with the recommended oil to the upper limit mark. Do not overfill (Fig. 6B).
5. Reinstall the oil cap/dipstick.

NOTICE

When using the dipstick to check oil level, DO NOT screw in the dipstick while checking.

NOTICE

Check oil level often during the initial 20 hour engine run period. Refer to the *Maintenance* section for recommended service intervals.

NOTICE

Synthetic oil may be used after the first oil change. Using synthetic oil does not decrease the recommended oil change interval. Full synthetic 5W-30 oil will aid in starting in cold ambient < 41º F (5º C) temperatures.

CAUTION

This engine is equipped with a low oil shut-off and will stop when the oil level in the crankcase falls below the threshold level.

Add Fuel

Use clean, fresh, regular unleaded gasoline with a minimum octane rating of 87 and an ethanol content of 10% or less by volume. E10 E15 E85

DO NOT mix oil with gasoline (Fig. 7).

1. Remove the fuel tank cap.

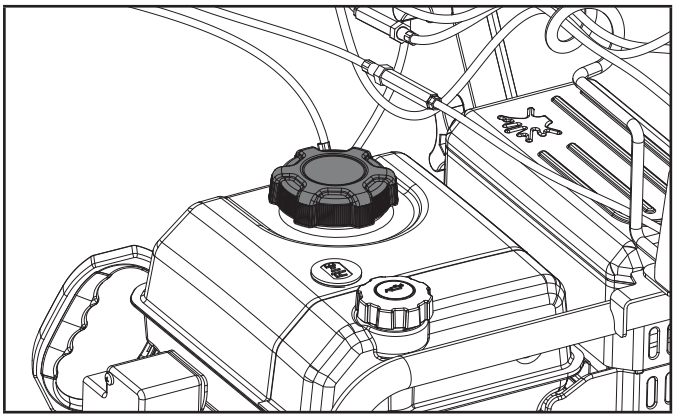

Figure 7

2. Add fuel to the bottom of the fuel level limit in the neck of the fuel tank. Do not overfill. Wipe up spilled fuel before starting the snowblower. Fuel tank capacity: 0.7 gal. (2.6 L) (Fig. 8).

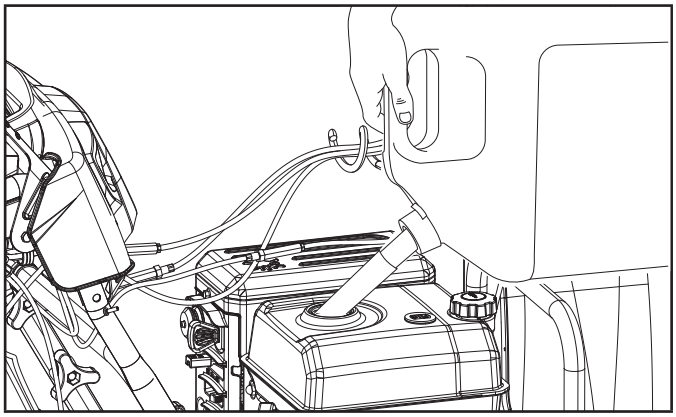

Figure 8

3. The approximate fuel level is shown on the fuel gauge on top of the fuel tank. Wipe up spilled fuel before starting the snow blower. Fuel tank capacity. 0.7 gal. (2.6 L) (Fig. 9).

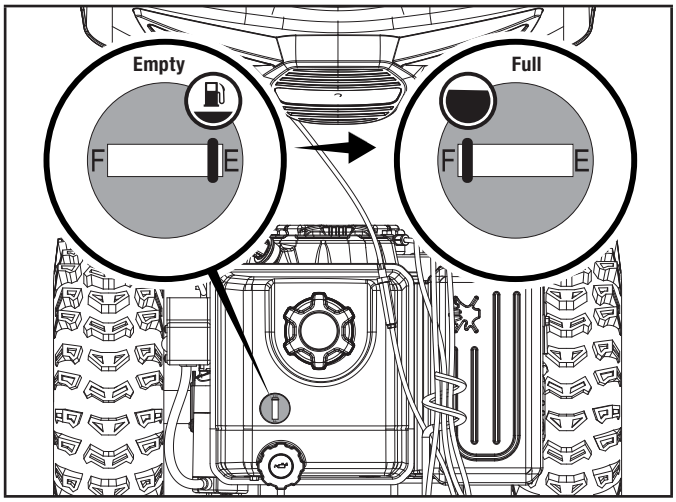

Figure 9

CAUTION

Use unleaded gasoline with a minimum octane rating of 87 and an ethanol content of 10% or less by volume.

DO NOT light cigarettes or smoke when filling the tank.

DO NOT mix oil and gasoline.

DO NOT overfill the tank. Fill tank to approximately ¼ in. (6.4 mm) below the top of the tank to allow for gasoline expansion.

DO NOT pump gasoline directly into the snowblower at the pump. Use an approved fuel container to transfer the gasoline to the snowblower.

DO NOT fill tank indoors.

DO NOT fill tank when the engine is running or hot.

⚠ WARNING

Pouring gasoline too fast through the fuel screen may result in gasoline splashing over the snowblower and operator while filling.

NOTICE

The snowblower engine works well with 10% or less ethanol blend gasoline. When using ethanol-gasoline blends there are some issues worth noting:

- Ethanol-gasoline blends can absorb more water than gasoline alone.
- These blends can eventually separate, leaving water or a watery goo in the tank, fuel valve and carburetor. The compromised gasoline can be drawn into the carburetor and cause damage to the engine and/or potential hazards.
- If a fuel stabilizer is used, confirm that it is formulated to work with ethanol-gasoline blends.
- Any damages or hazards caused by using improper gasoline, improperly stored gasoline, and/or improperly formulated stabilizers, are not covered by manufacturer's warranty.

It is advisable to always shut off the gasoline supply and run the engine to starvation after each use. See Storage instructions for extended non-use.

OPERATION

⚠ WARNING

Never use the snowblower without first reading and understanding the operating instructions, warnings and instruction labels located on the machine.

Before Operation

- Check the General Condition.
- Look around and underneath the engine for signs of oil or gasoline leaks.
- Remove any excessive dirt or debris, especially around the muffler and recoil starter.
- Look for signs of damage.
- Check that all shields and covers are in place, and all nuts, bolts, and screws are tightened.

Check the Engine

1. There is no fuel or oil in the engine. Fill with fuel and add 0W-30 prior to first use.
2. Check the fuel level (see *Add Fuel* under *Assembly* section).
3. Check the oil level (see *Add Engine Oil* under *Assembly* section).

⚠ WARNING

Always check the engine oil level before operation. Using the snowblower without oil can seriously damage the engine and void your warranty. The machine must stand on level ground when checking.

Engine key and throttle lever plastic piece need to be attached before first use. These parts may be attached to the recoil starter grip. Please remove the key and throttle lever from the recoil starter grip and attach/install properly.

⚠ WARNING

Always wear eye protection with side shields marked to comply with ANSI Z87.1. Failure to do so could result in objects being thrown into your eyes and other possible serious injuries.

Starting the Engine

1. Make sure the engine key (safety lock out) is inserted into the key hole.
2. To start a warm engine: (Fig. 10).

   2a. Move the fuel valve lever to the "ON" position.

   2b. Move the choke lever to the "RUN" position.

   2c. Move the throttle lever to full speed.

   2d. Do not prime.

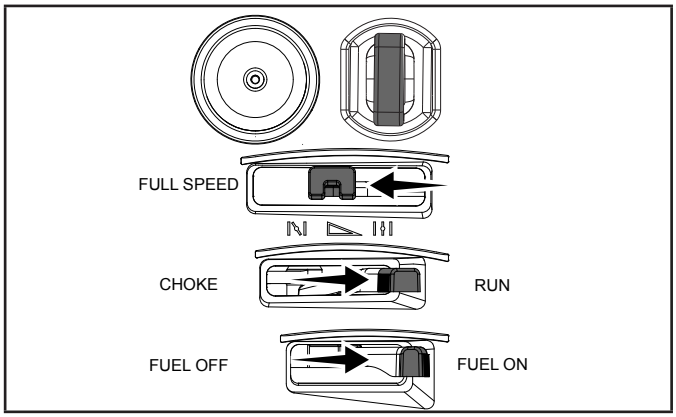

Figure 10

3. To start a cold engine: (Fig. 11).

   3a. Move the fuel valve lever to the "ON" position.

   3b. Move the choke lever to the "CHOKE" position.

3c. Move the throttle lever to full speed.

3d. Prime 3-5 times.

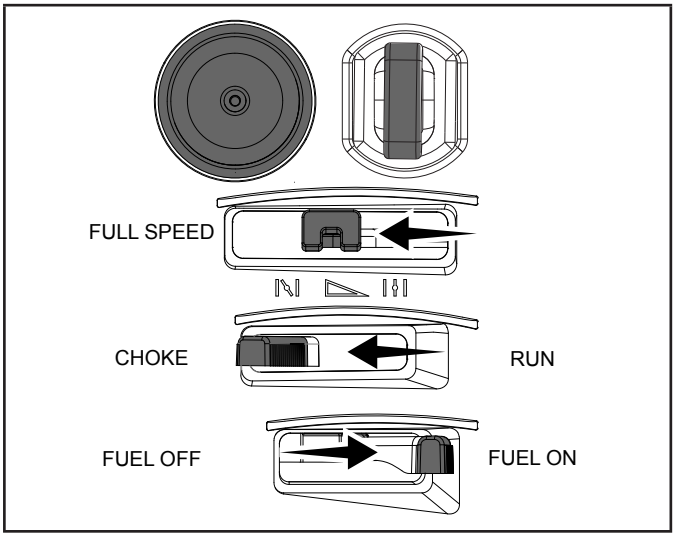

Figure 11

4. Stand back and to the right of the unit, pull the starter grip lightly until you feel resistance then pull briskly. Return the starter grip gently (Fig. 12).

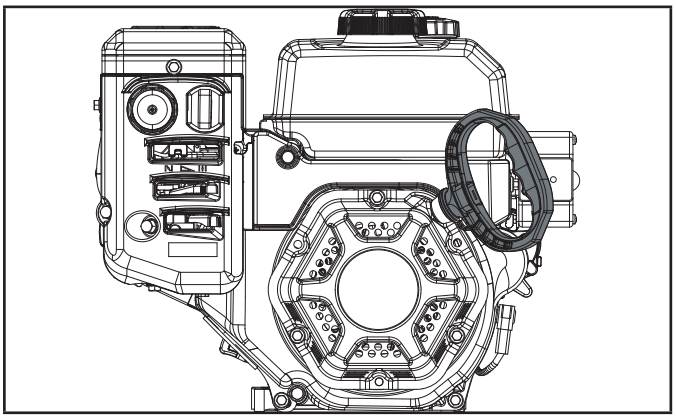

Figure 12

5. Alternatively, for electric start, plug in the supplied electrical cord into the starter. Press the electric start button and make sure that the mains supply voltage is 120 V~ 60 Hz (Fig. 13).

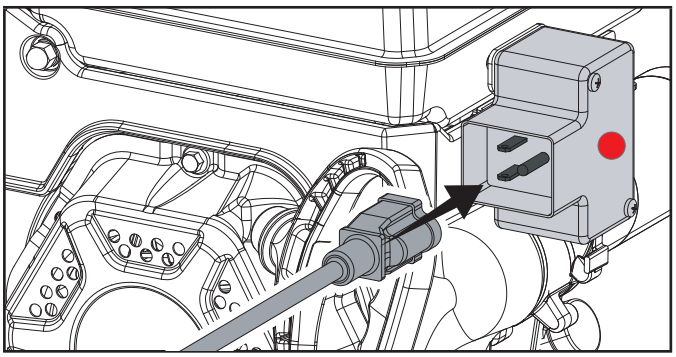

Figure 13

6. To start a cold engine: When the engine starts, move the choke to RUN position.

Stopping the Engine

To stop the engine in an emergency situation or during normal operation, simply remove the engine key.

Operation at High Altitude

The density of air at high altitudes is lower than at sea level. Engine power is reduced as the air mass and air-fuel ratio decrease. Engine power and snowblower output will be reduced approximately 3½% for every 1000 ft. of elevation above sea level. At high altitudes increased exhaust emissions can also result due to the increased enrichment of the air fuel ratio. Other high altitude issues can include hard starting, increased fuel consumption and spark plug fouling.

To alleviate high altitude issues other than the natural power loss, CPE can provide a high altitude carburetor main jet. The alternative main jet and installation instructions can be obtained by contacting our Technical Support Team. Installation instructions are also available in the Technical Bulletin area of the CPE website.

The part number and recommended altitude range for the application of the high altitude carburetor main jet is listed in the following table.

In order to select the correct high altitude main jet it is necessary to identify the carburetor model. For this purpose, a code is stamped on the side of the carburetor. Select the correct high altitude jet part number corresponding to the carburetor code found on your particular carburetor.

Carb. Code	High Alt. Jet Part Number	Altitude Range
16100-Z1S0210-00A0	16161-Z151110-00A1	3000'-6000' (914-1828 m)
	16161-Z150910-00A0	6000'-8000' (1828-2438 m)

⚠ WARNING

Operation using the alternative main jet at elevations lower than the recommended minimum altitude can damage the engine. For operation at lower elevations, the originally supplied standard main jet must be used. Operating the engine with the wrong engine configuration at a given altitude may increase its emissions and decrease fuel efficiency and performance.

Control Levers

	Self-drive control handle. Located on the left side handle (figure 14).
	When the snowblower has been put into gear, pushing this lever towards the handle engages the wheels.
	Releasing the self-drive control handle causes the machine to stop moving.

Self-Drive Control Lever:

1. Located on the left-side (from behind the snowblower). When the snowblower has been put into gear, pushing this lever towards the handle engages the wheels. Releasing the self-drive control lever causes the machine to stop moving (Fig. 14).

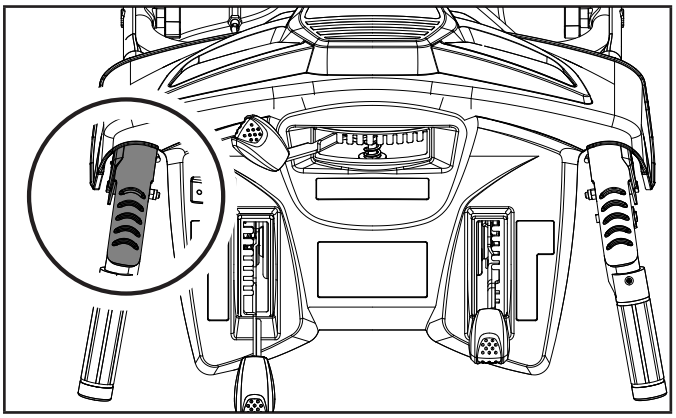

Figure 14

Speed Control Lever:

1. Forward speeds range from slowest position 1 to fastest position 6. Reverse speeds range from slowest position R1 to fastest position R2 (Fig. 15).

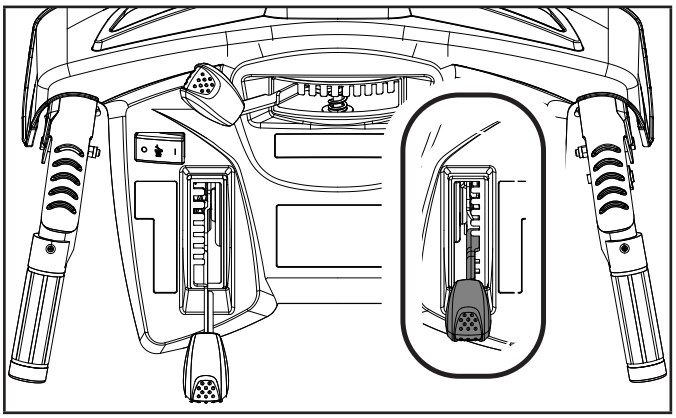

Figure 15

	Auger control handle. Located on the right side handle.
	Pushing this lever towards the handle causes the auger and impeller to activate.
	Releasing the auger control handle causes the auger to stop moving.

Auger Control Lever:

1. Located on the right side (from behind the snowblower). Pushing this lever towards the handle causes the auger and impeller to activate. Releasing the auger control lever causes the auger to stop moving (Fig. 16).

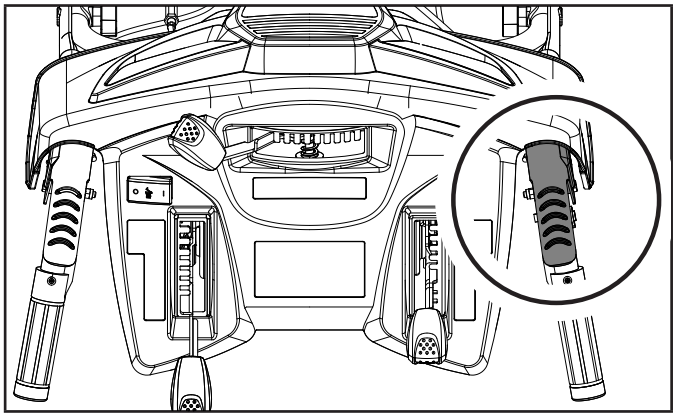

Figure 16

⚠ WARNING

Watch out for rotating auger. Keep hands, feet, hair and loose clothing away from any moving parts on the machine.

Adjusting the Snow Discharge Direction and Height

Change discharge direction:

Discharge chute rotation lever controls the chute either left or right (Fig. 17).

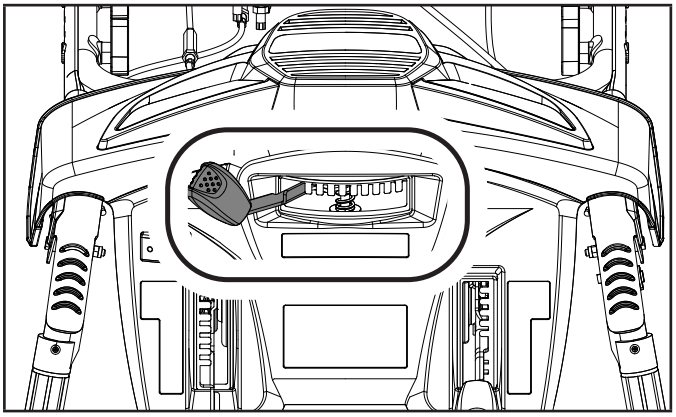

Figure 17

Change discharge height:

Discharge chute deflector lever controls the deflector up or down (Fig. 18).

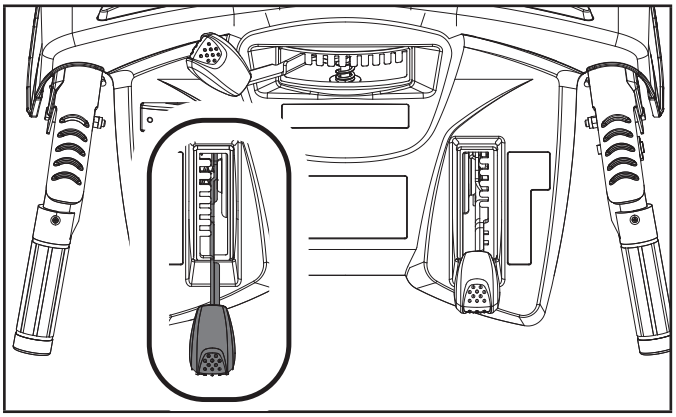

Figure 18

Clearing a Clogged Discharge Chute

⚠ DANGER

DO NOT use your hands to clean out the discharge chute.

To clear the chute:

1. SHUT THE ENGINE OFF!
2. Wait 10 seconds to be sure the auger blades have stopped rotating.
3. Always use the provided clean-out tool to clear out the discharge chute.

Adjusting the Snow Shoes

Set the height of the auger housing above the ground using the shoes.

Adjust the shoes to suit the ground conditions:

– On flat ground, e.g. asphalt, the shoes should be adjusted to about ⅕ in. (5 mm) (the distance from the auger to the ground).

– On uneven ground, e.g. gravel paths, the shoes should be adjusted to about 1⅕ in. (30 mm) (the distance from the auger to the ground).

To adjust the shoes

1. Loosen the nuts.
2. Move the shoes upward or downward to adjust height.
3. Tighten the nuts.

⚠ WARNING

Always adjust the shoes so that gravel and stones are not fed into the snowblower. There is a risk for personal injury if these are thrown out at high speed.

Ensure the shoes are adjusted the same on both sides.

⚠ WARNING

Do not at any time make any adjustment to machine without first stopping the engine and disconnecting the spark plug wire.

⚠ WARNING

Before changing height, stop engine and disconnect spark plug cable.

Power Turn Steering Technology

Power Turn Steering Technology enables effortless power steering on your snowblower. Power Turn Steering Technology is able to sense the direction your trying to turn the snowblower and engages the drive system to assist turning in the desired direction.

Clutch Lock Feature

This snowblower offers a clutch lock feature that will enable the operator to keep the snowblower moving forward while you adjust the chute. To use the clutch lock system, follow the following steps.

1. While both the drive and auger control levers are fully depressed, release the auger control lever while keeping the self-drive control lever fully depressed. The clutch lock feature will automatically keep the auger control lever engaged as long as the self-drive control lever is depressed.

2. This allows the operator to keep driving the snowblower while they now use their right hand to make any adjustments to the discharge chute needed to maximize operation.
3. To disengage the clutch lock feature simply release the self-drive control lever.

After Use

1. Check for loose or damaged parts. If required, change damaged parts.
2. Tighten loose screws and nuts.
3. Brush all the snow from the machine.
4. Move all the controls backwards and forwards a few times.
5. Disconnect the spark plug wire from the spark plug.

MAINTENANCE

⚠ WARNING

Always disconnect the spark plug wire during times of inactivity, cleaning and maintenance. This will prevent any accidental start up that may cause damage or injury.

⚠ WARNING

Never operate a damaged or defective snowblower

⚠ WARNING

Improper maintenance will void your warranty.

NOTICE

For Emission control devices and systems, read and understand your responsibilities for service as stated in the Emission Control Warranty Statement of this manual.

Engine Maintenance

Safety Precautions

Make sure the engine is off before you begin any maintenance or repair. This will eliminate several potential hazards:

– Carbon monoxide poisoning from engine exhaust — never run the machine indoors. The exhaust fumes contain carbon monoxide, a very toxic gas.

– Burns from hot parts — let the engine cool for 30 minutes before touching hot parts.

– Injury from moving parts — read the instructions before you begin, and make sure you have the tools and skills required.

To reduce the possibility of fire or explosion, be careful when working around gasoline. Use only a nonflammable solvent, not gasoline, to clean parts. Keep cigarettes, sparks and flames away from all fuel-related parts.

⚠ WARNING

Do not cover the machine while the engine and muffler are still hot.

Oil Change

Drain the engine oil when the engine is warm. Warm oil drains quickly and completely.

1. Turn the fuel valve lever to the OFF position to reduce the possibility of fuel spillage.
2. Place a suitable container below the snowblower to catch the used oil.
3. Remove the drain bolt and drain the oil into the container by slightly tipping the engine toward the oil cap/dipstick.

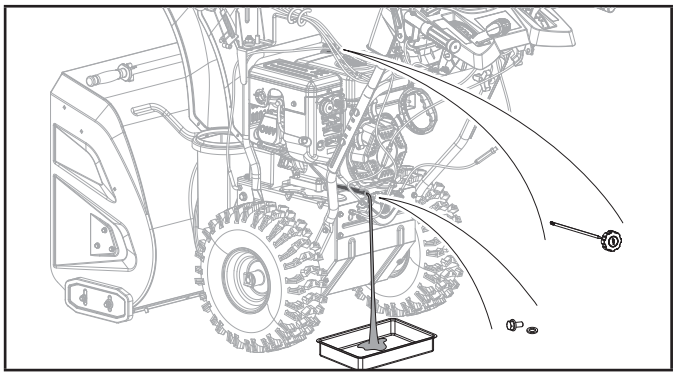

Figure 19

4. With the engine in a level position, fill to the upper limit mark on the dipstick with the recommended oil (0W-30). Check your manual for correct oil capacity.
5. Reinstall the oil cap/dipstick securely.

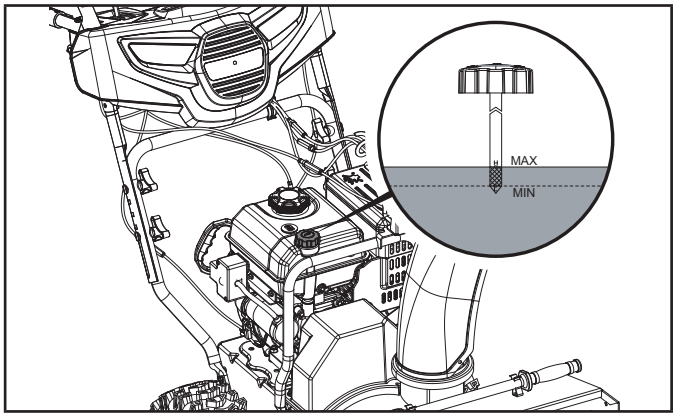

Figure 20

Replacing Shear Pins

1. The augers are secured to the spiral shaft with shear pins and clips. If the auger should strike a foreign object or ice jam, the snowblower is designed so that the pins shear.

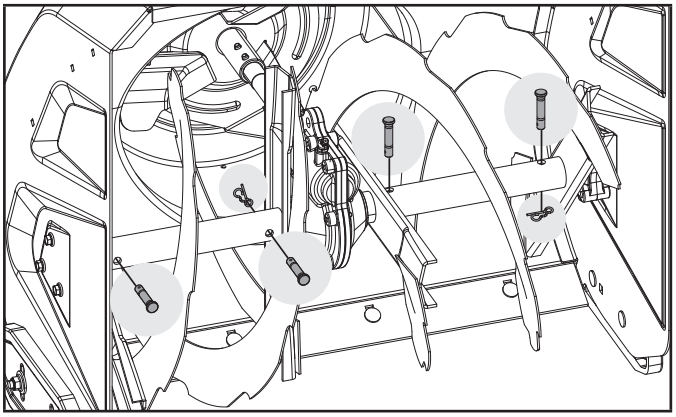

Figure 21

2. If the augers will not turn, check to see if the pins have sheared. Replacement shear pins and clips are found in the operator manual bag.

Adjusting Self-Drive Control Handle Cable

The cables are preset by the factory. Proper tension is important because you will want your snowblower to move forward properly in heavy snowfalls. You will want to perform this test when temperatures are above freezing before snow season sets in. There are 2 levels of tension in the control handles. It is best to run this test while the engine is on. Shut down the engine once you're ready to make any adjustments.

Stage 1 there is no tension, the transmission is disengaged.

Stage 2 there is tension, the transmission is engaged.

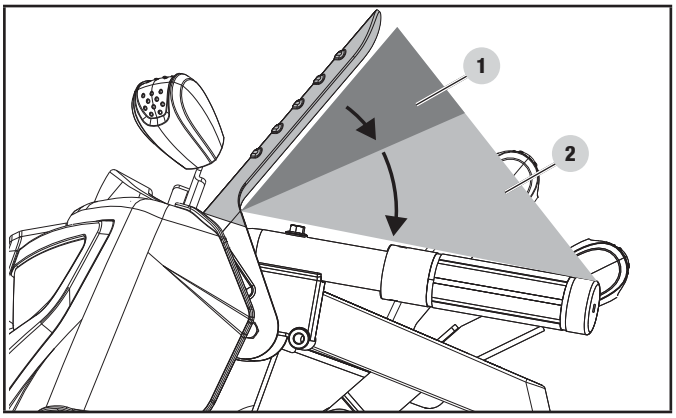

Figure 22

If there is no stage 2, the friction disc is near end of life.

Stage 1 increases slightly during long-term usage. If stage 1 is most of the control handle movement, the wheels will not rotate properly. Make adjustments as follows.

Tighten the cable and reduce the length of stage 1 to approximately what is shown above visually. Do not reduce the length of stage 1 to almost none, there will be a risk of no disengagement. Loosen the nut counterclockwise, then loosen the center bolt clockwise. Test function. Tighten the nut clockwise against the long sleeve bolt.

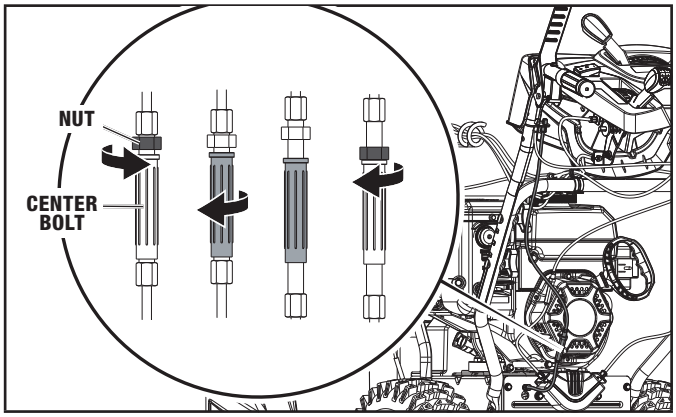

Figure 23

If the snowblower fails to drive with the drive control engaged and performing the drive control cable adjustment fails to correct the problem, the friction disc may need to be replaced. See "Repair or Replace Friction Disc" section.

If the friction disc is ok, then you should replace the cable.

If you find the wheel drives when the handle is not pressed, or when the handle and the wheels do not drive or rotate, the cable is most likely frozen. You should replace the cable or wait until it thaws out to test.

Adjusting Self-Drive Speed Control Handle Cables

1. Make sure all fluids are removed and spark plug is disconnected.
2. Locate the speed control cables. There are 2 cables.

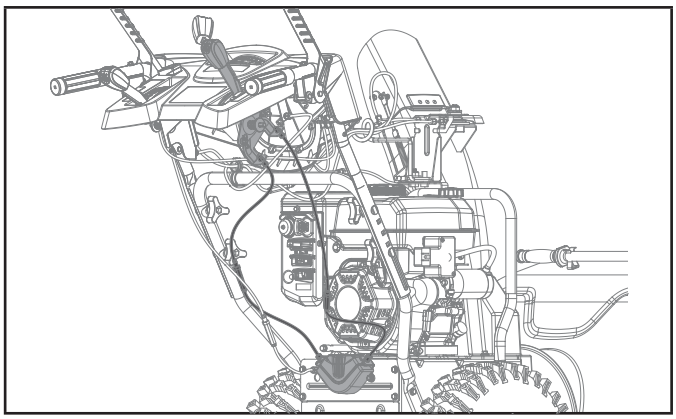

Figure 24

3. Move the speed control lever to the fastest (top) and slowest (bottom) position. If you are able to move the lever to these 2 positions, go to the next step. If not, adjust the center bolt and nut to loosen the cable, then you can set the handle to either the fastest or slowest speeds. Loosen the nut counterclockwise, then loosen the center bolt clockwise. Test function. Tighten the nut clockwise against the long sleeve bolt.

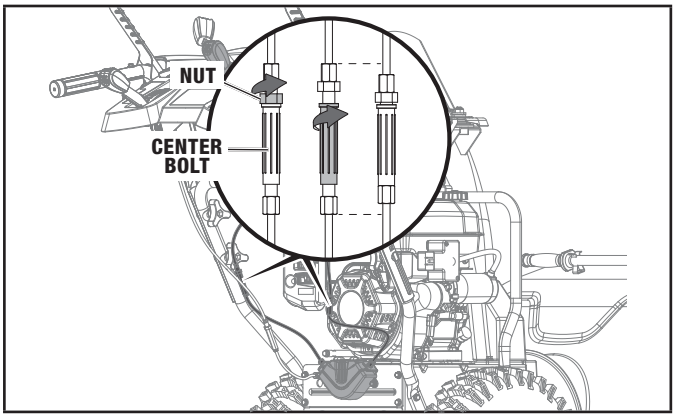

Figure 25

4. If you are able to adjust the speed lever to top most or bottom most position, move the lever to rest on the boss between R1 and R2 (both reverse speeds), then adjust the center bolt and nut until the cable is tight on the top most cable as shown. Do not over tighten the bolt and nut. Do not do adjust the other cable.

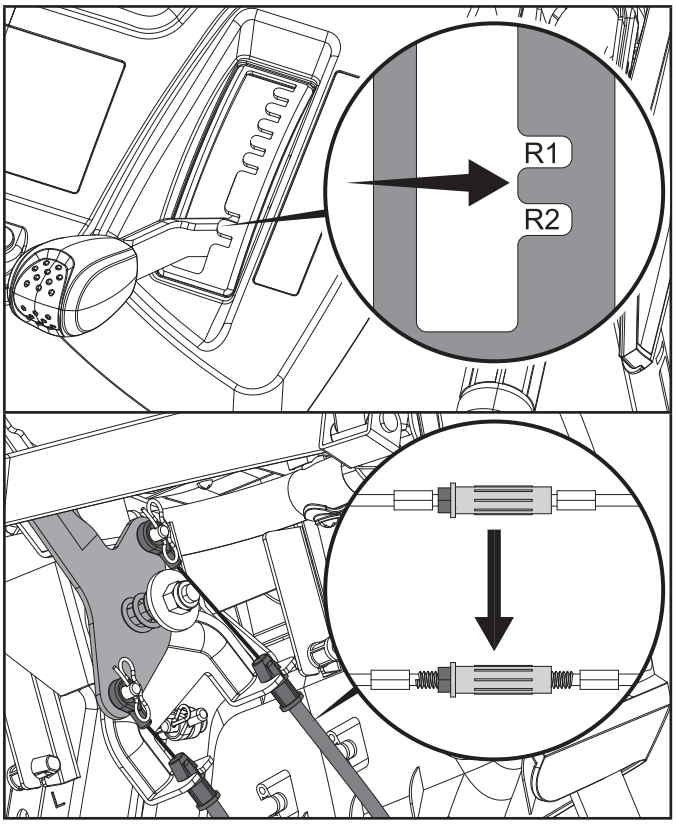

Figure 26

5. Set the handle to the boss between D5 and D6 (top 2 forward speeds), then adjust the center bolt and nut until the cable is tight as shown. Do not over tighten the bolt and nut.

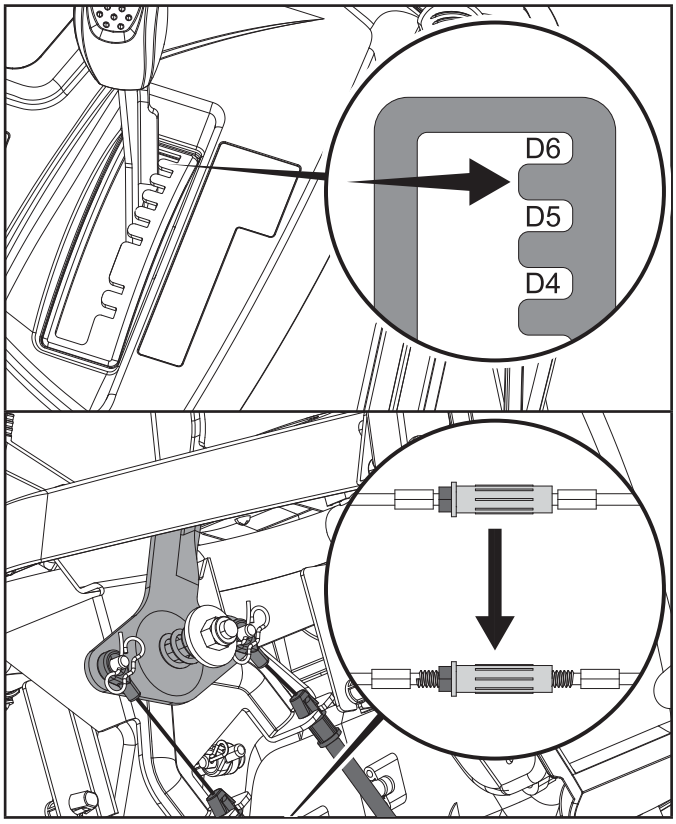

Figure 27

6. Try the speed control lever in any position, both cables should be straight, but not overly tight in any position. If not, repeat step 3 through 5.
7. Perform a speed test to confirm everything is in working order. If you're still experiencing issues, please look at the next steps.
8. A slow speed of D1 (slowest forward speed) will be helpful for thick snow. If you want to decrease D1 speed, loosen about 1 or 2 threads for cable 1, then tighten about 1 or 2 threads for cable 2. Do not adjust too much which could set D1 in reverse.

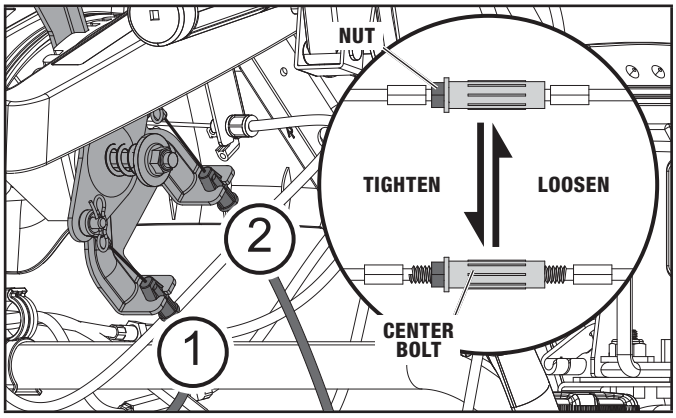

Figure 28

9. Check the cable is always straight when the handle at any position, then tighten the two pair of bolts and nuts.

If the snowblower speed control adjustment fails to correct the problem or the speed control will not move even with the engine on, the shift fork steering assembly may need to be replaced. See “Replace Shift Fork Steering Assembly” section.

Adjusting Auger Control Cable

Proper tension is important because you will want your snowblower to maximize belt life in heavy snowfalls. The belt tension controlled by the auger cable is preset by the factory. During regular usage, the auger belt will lose tension over time and need to be adjusted. If you notice your auger is not engaging, follow these steps to correct performance.

1. Locate the auger control cable connected to the auger control lever on the right-hand side from the user position.

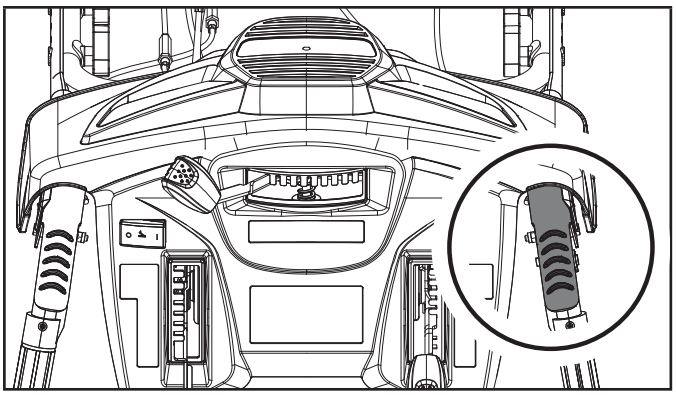

Figure 29

2. Locate and adjust the bolt and nut on the cable. Lengthening this nut connection will create more tension with the auger belt. Do not over adjust the cable, too much tension on belt will not allow the belt to separate from the pulley when disengaging. If the belt isn’t allowed to disengage properly, this will cause premature wearing of the belt and ultimately cause belt failure.

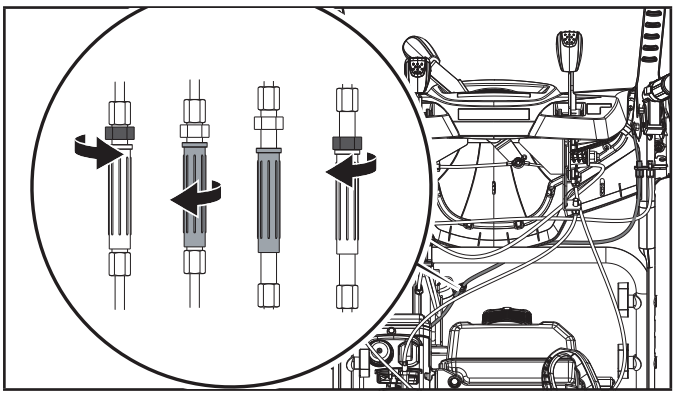

Figure 30

3. With a helper, operate the auger control on and off with the control lever, and make sure the auger visually isn’t turning when released (Your helper would need to be a safe distance to help you determine if the adjustments are working. They will need to view the auger or impeller rotation while you press down or release the control lever). If when released, there is a slightly turning of the auger, make slight adjustments to fine tune performance to stop the rotation when released, but working when pressed down.

Adjusting Discharge Chute Cables

The snow discharge chute cables control the left and right motion of the snow discharge chute.

When you notice, either the chute isn’t turning or not turning completely, locate and adjust the bolt and nut on the cable.

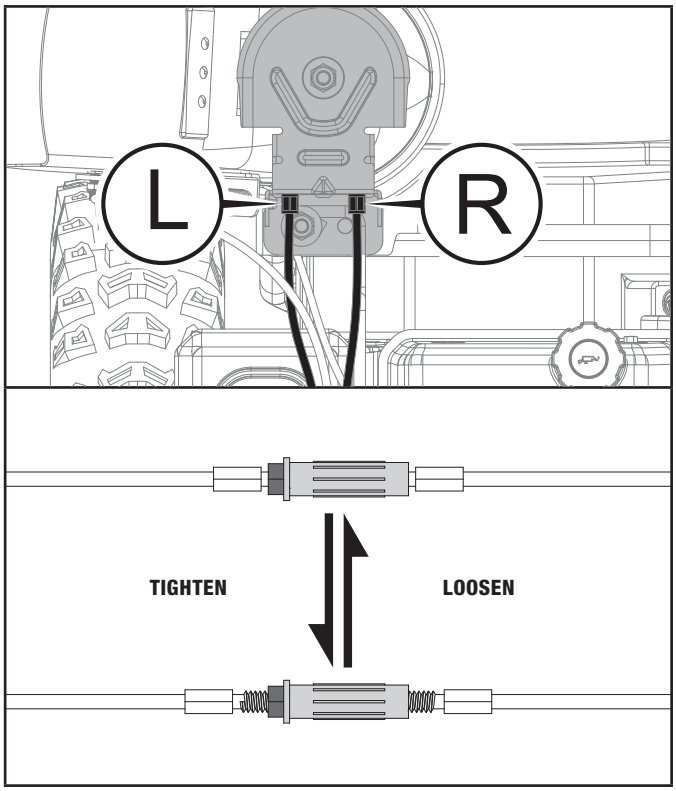

Figure 31

1. Adjust the right cable to increase turn to max.

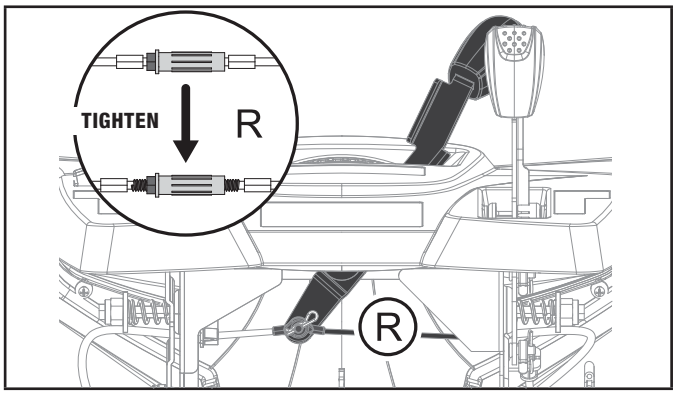

Figure 32

2. Adjust the left cable to increase turn to max. Loosen the nut counterclockwise, then loosen the center bolt clockwise. Test function. Tighten the nut clockwise against the long sleeve bolt.

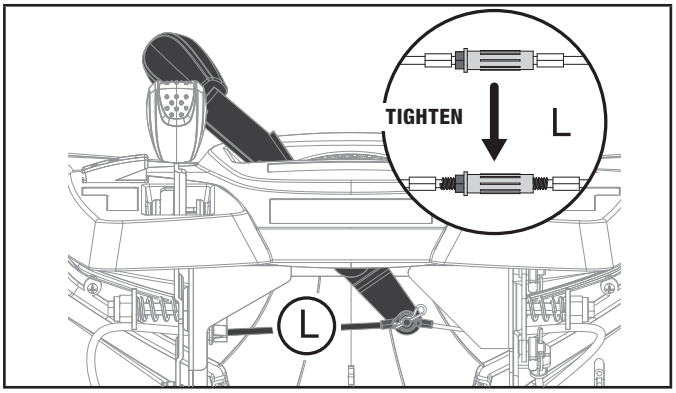

Figure 33

Replace Discharge Chute Deflector Cable

Make sure all fluids are removed and spark plug is disconnected.

To remove and replace your snowblower's chute deflector cable, proceed as follows:

1. Adjust the deflector in its full, upright position.

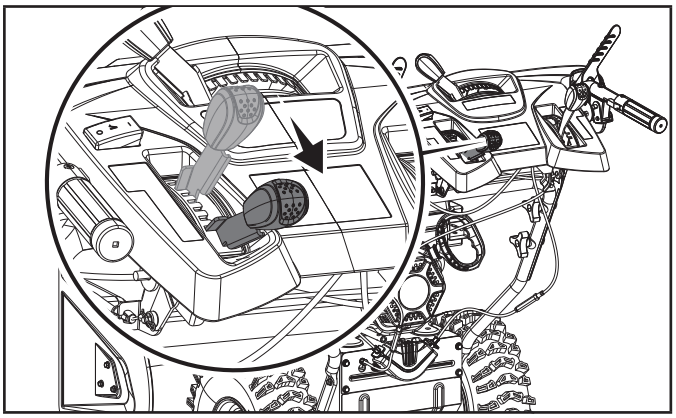

Figure 34

2. Remove the B pin.

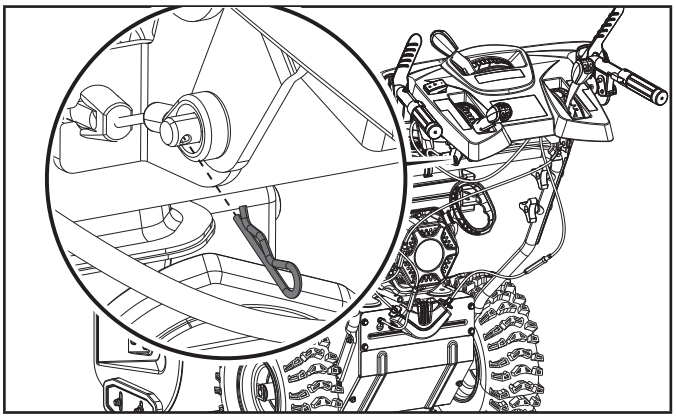

Figure 35

3. Remove the anchor pin by sliding it off.

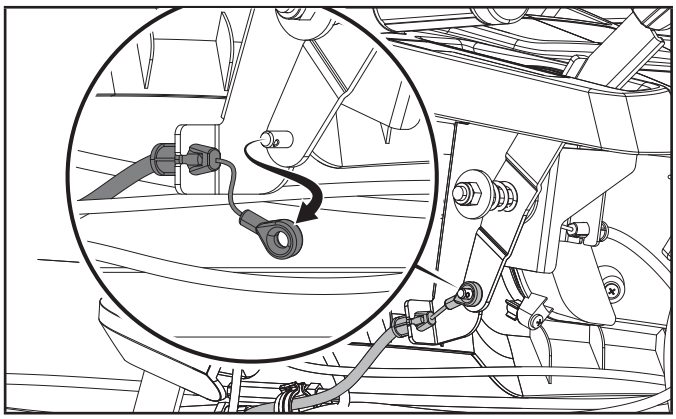

Figure 36

4. On the control panel side, press the cable busing tabs and pull it out. Be careful not to damage the tabs.

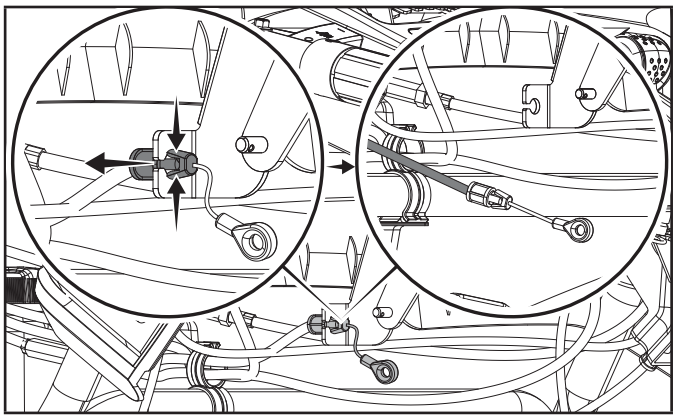

Figure 37

5. On the chute side, press the cable busing tabs and pull it out. Be careful not to damage the tabs.

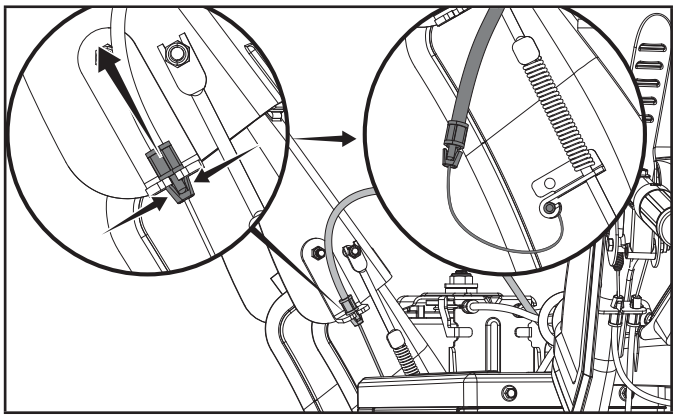

Figure 38

6. Remove the cable end from the bracket.

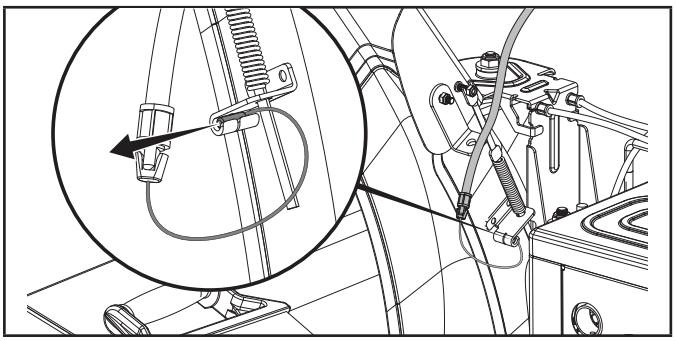

Figure 39

7. Follow the reverse steps to replace the cable.

Replace Self-Drive Control Handle Cable

1. Carefully pivot the snowblower up and forward so that it rests on the auger housing. Place a piece of cardboard or moving blanket on the ground before tipping forward. Make sure all fluids are removed and spark plug is disconnected.
2. Remove the base frame cover (1) from the underside of the snowblower by removing the six M6 × 16 screws which secures it.

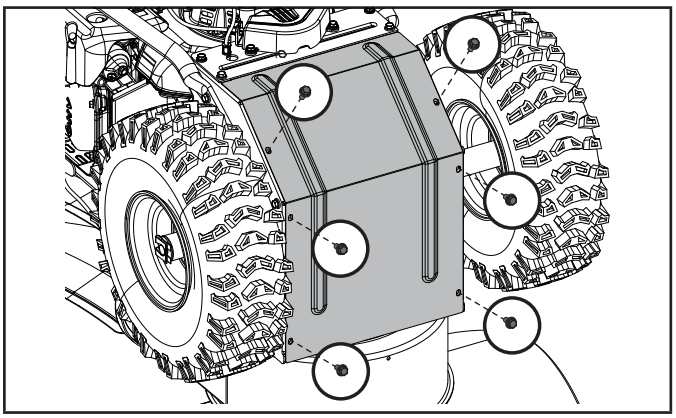

Figure 40

3. Locate the self-drive cable.

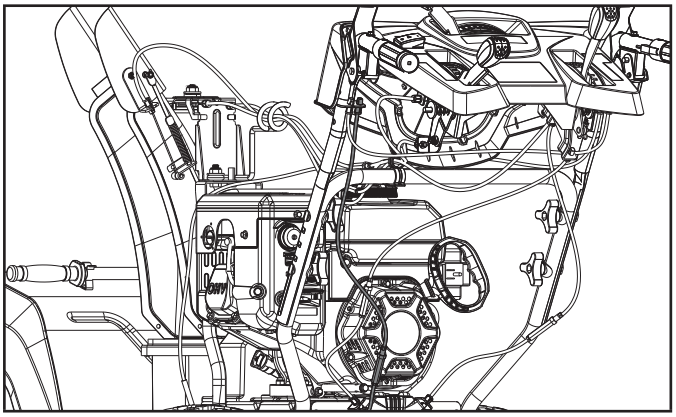

Figure 41

4. Unhook the spring from the drive plate hole (1).
5. Squeeze and remove the strain relief from the machine side (2).

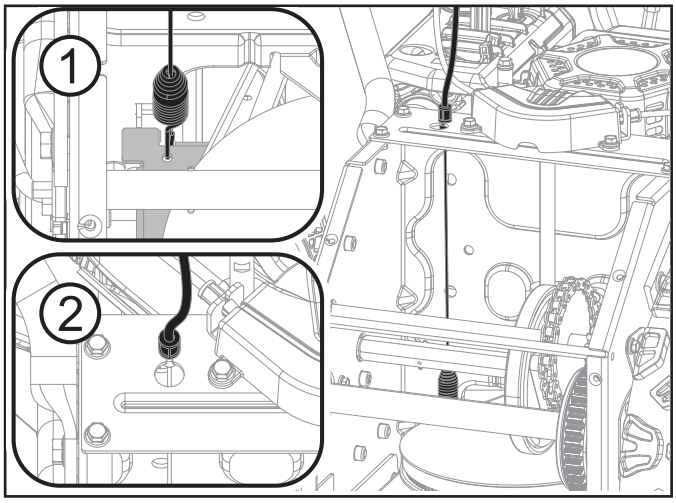

Figure 42

6. Unhook the connector in the control handle. You may have to move the control handle to make these easier to remove (3).
7. Squeeze and remove the strain relief from the control handle side (4).
8. Perform the steps in reverse with the new cable.

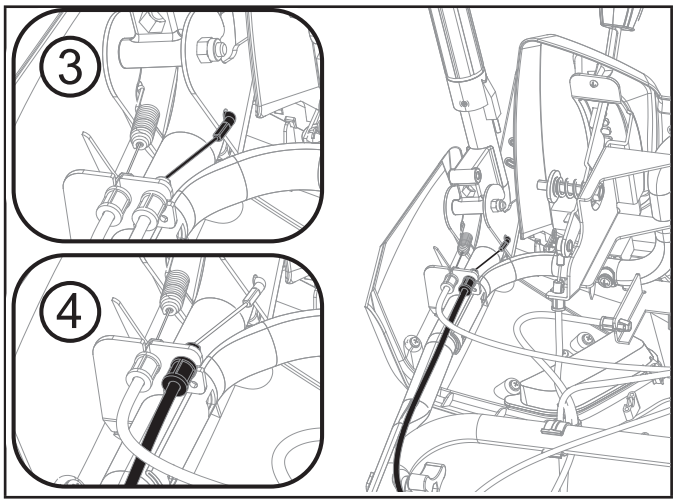

Figure 43

Replace Auger Belt

Make sure all fluids are removed and spark plug is disconnected.

Tools required:

– 10mm size wrench.

– 13mm wrench.

To remove and replace your snowblower's auger belt, proceed as follows:

1. Remove the plastic belt cover on the front of the engine by removing two M6 × 16 bolts.

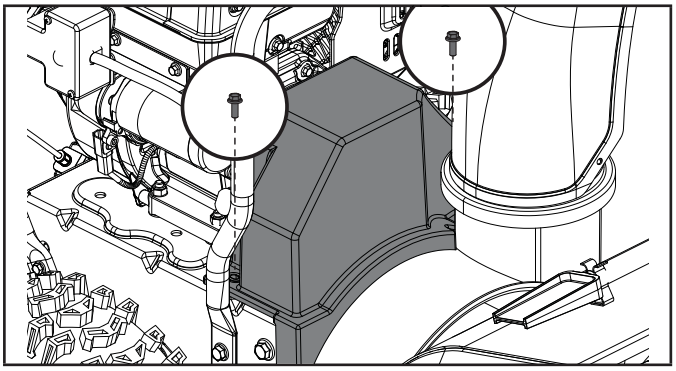

Figure 44

2. Slip the old auger drive belt over the auger drive pulley. If you are unable to remove the belt in this step, please disassemble the engine pulley in the next step.

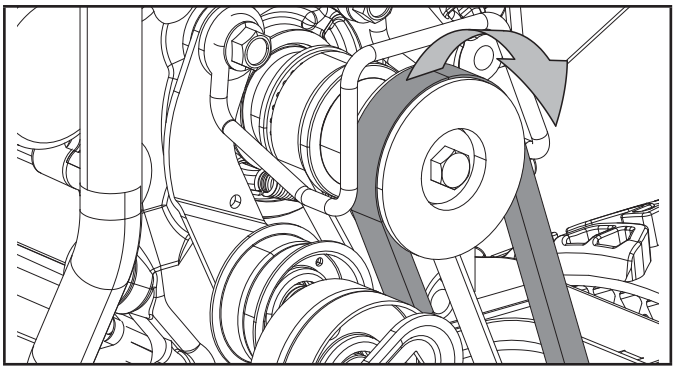

Figure 45

3. Remove the engine pulley and washer.

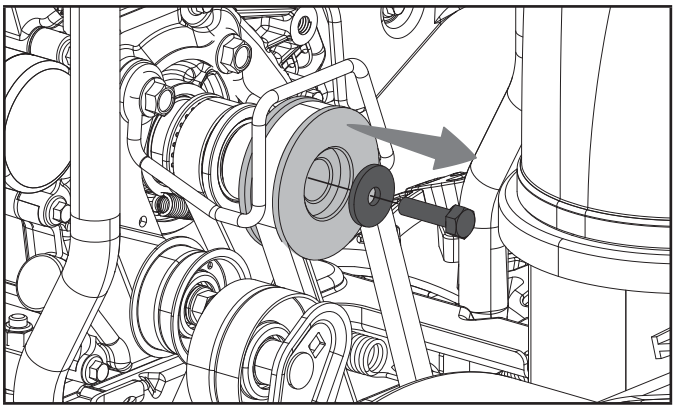

Figure 46

4. Carefully pivot the snowblower up and forward so that it rests on the auger housing. Place a piece of cardboard or moving blanket on the ground before tipping forward.

5. Remove the wheels by first removing the wheel clip and then sliding the wheels off the axles.

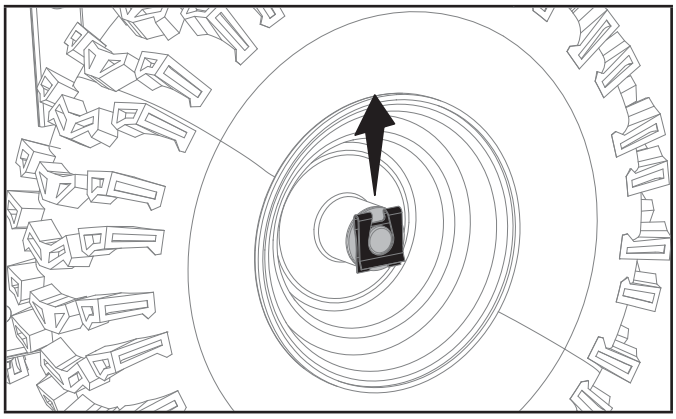

Figure 47

6. Save the key from each wheel. Do not lose each key from each wheel. You will need these when you reassemble the wheels on the axles.

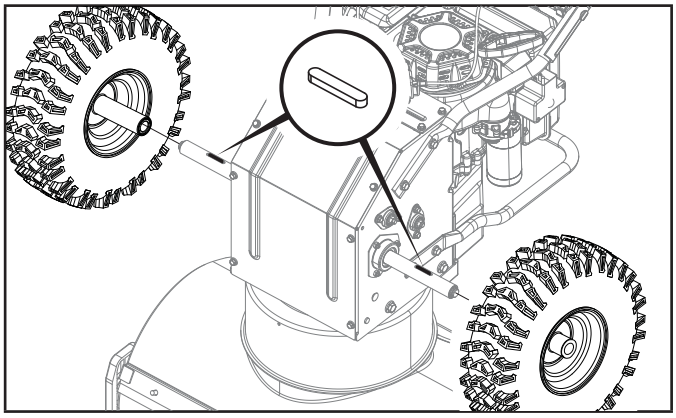

Figure 48

7. Remove the base frame cover from the underside of the snowblower by removing the six M6 × 16 screws which secure it.

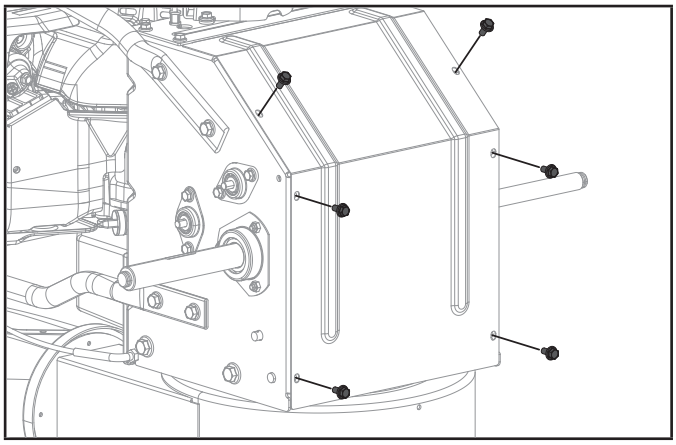

Figure 49

8. Remove the connecting shaft as shown by removing the B clip and sliding the rod out of the way. This will allow you to move the friction disc away from the large auger pulley. Remove the auger belt from the larger pulley.

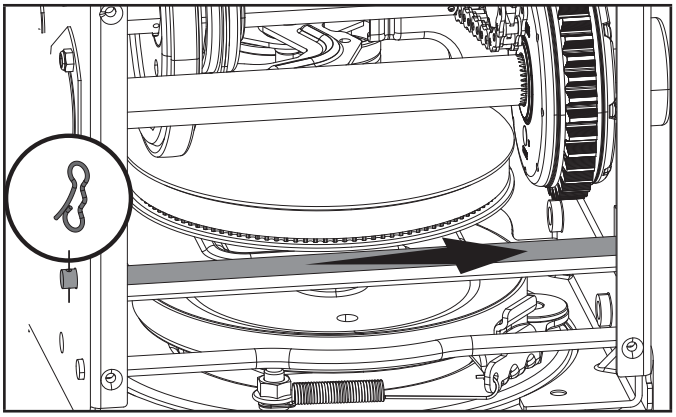

Figure 50

9. Slide the speed adjusting handle to position 6 (fastest forward speed) to move the rubber ring assembly to the edge of the friction disc. Then remove the loose belt by cutting it. If the belt has already broken, then remove any remaining belt pieces.

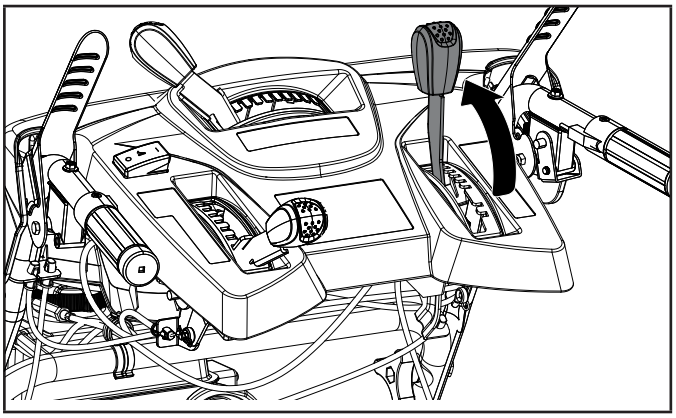

Figure 51

⚠ WARNING

If cutting the belt be careful of the tensioning pulley and arm as they are spring loaded and could cause injury when the belt is cut.

10. Slip the new auger drive belt into the compartment from the bottom of the snowblower placing it around the bottom of the auger drive pulley and slipping it around the front pulley on the engine. Ensure the belt is positioned between the bottom belt guard and the bottom of the auger drive pulley.

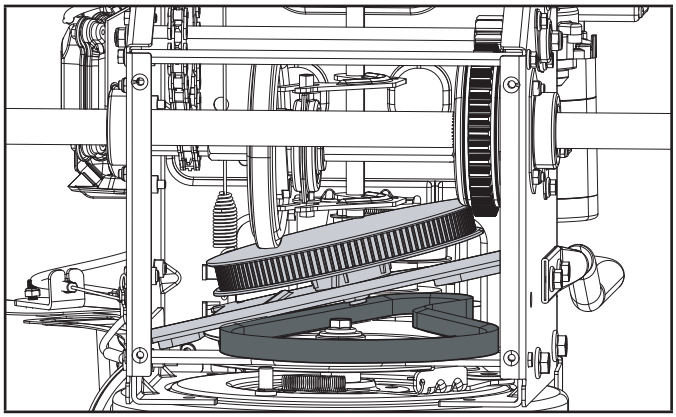

Figure 52

11. Ensure belt is seated below the belt brake on the idler pulley pivot arm.

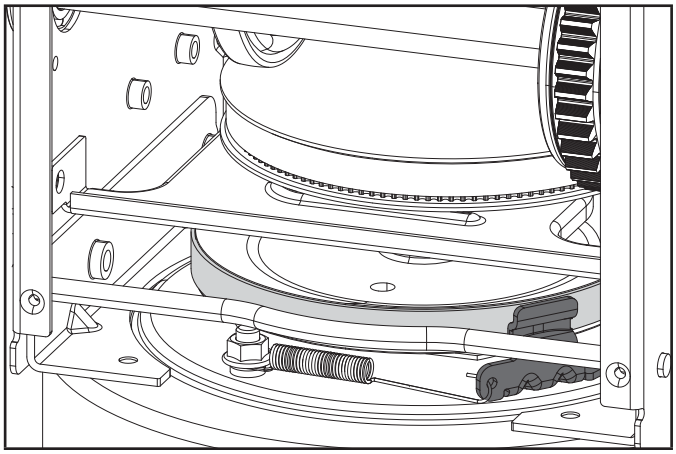

Figure 53

12. Reassemble / reattach the base frame cover.

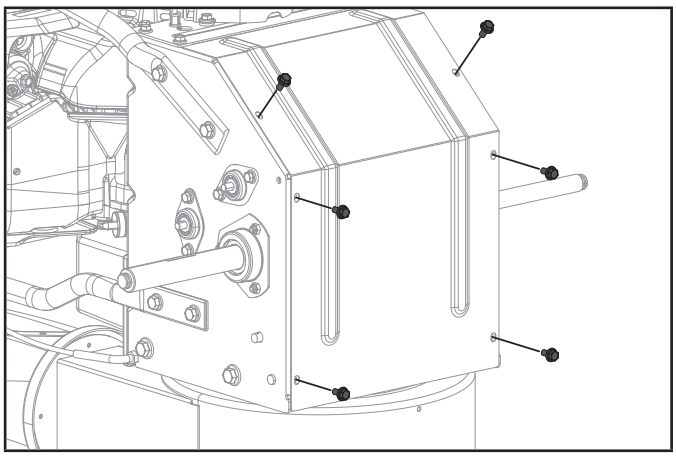

Figure 54

13. Reattach the wheels. Slide the key into the keyway of the axle and align the slot on the wheel hub.

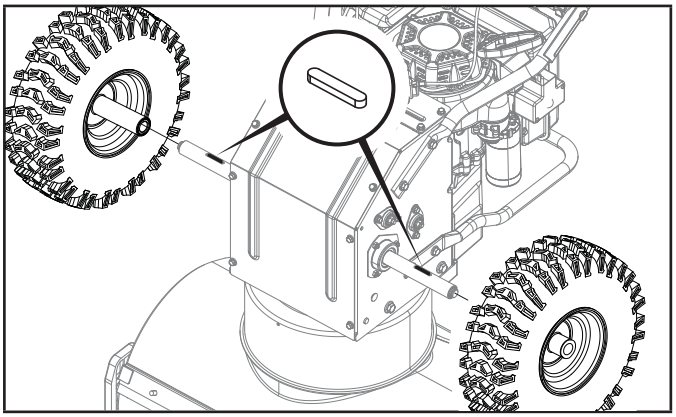

Figure 55

14. Attach the wheel clip until it clicks into place.

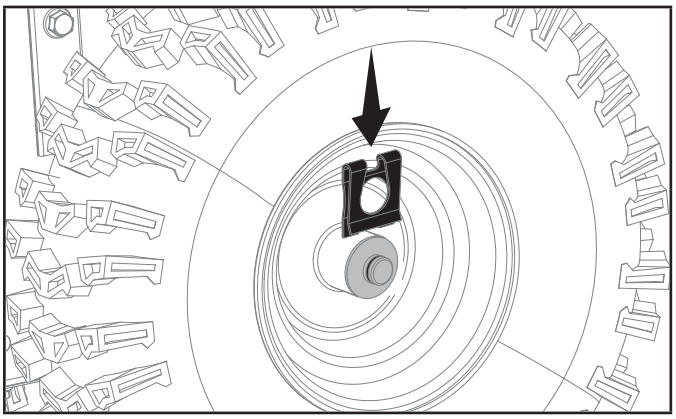

Figure 56

15. Turn the snowblower right side up. With the belt properly placed on both the front pulley and the auger drive pulley, pull the auger idler pulley back away from the belt and slip the belt inside the pulley. You can pull the recoil to rotate the pulley to help get it seated.

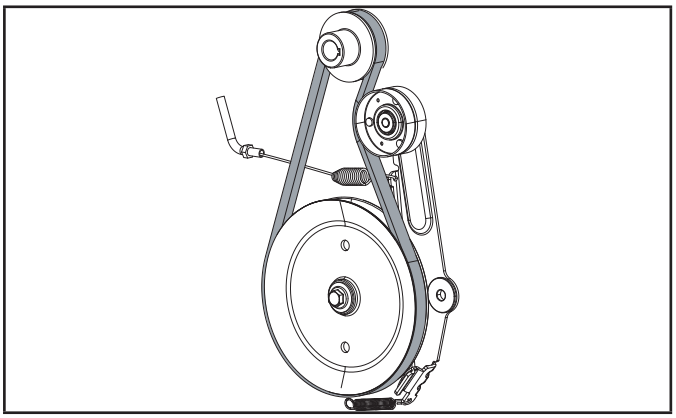

Figure 57

16. Pull the auger control handle to ensure the idler pulley is properly engaging the belt. Under the belt cover area, make sure the distance on both sides between the guide and pulley is the same.

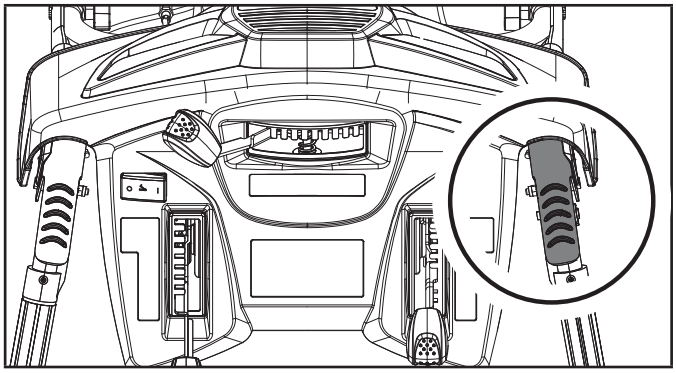

Figure 58

17. Carefully pivot the snowblower up and forward so that it rests on the auger housing. Place a piece of cardboard or moving blanket on the ground before tipping forward. Reinstall the base frame cover.
18. Turn the snowblower right side up. Install the plastic belt cover using two M6 × 16 bolts set aside from earlier step. Torque until snug. Do not overtighten or risk damaging the plastic belt cover.
19. Perform a drive test to confirm everything is in working order.

Repair or Replace Friction Disc

Make sure all fluids are removed and spark plug is disconnected.

Tools required:

– 12 size wrench.

– 19 size wrench.

To remove and replace your snowblower's friction disc, proceed as follows:

1. Carefully pivot the snowblower up and forward so that it rests on the auger housing. Place a piece of cardboard or moving blanket on the ground before tipping forward. Make sure all fluids are removed and spark plug is disconnected.
2. Remove the wheels by first removing the wheel clip and then sliding the wheels off the axles.

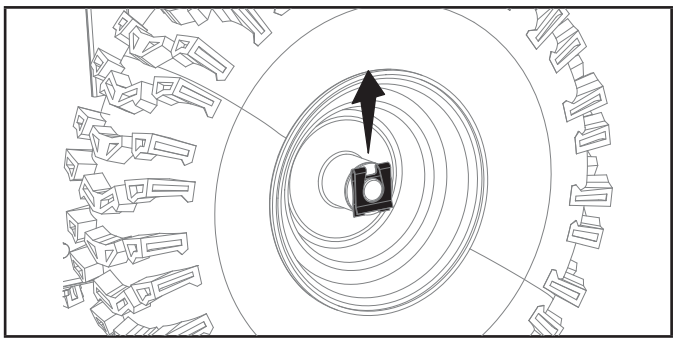

Figure 59

3. Save the key from each wheel. Do not lose each key from each wheel. You will need these when you reassemble the wheels on the axles.

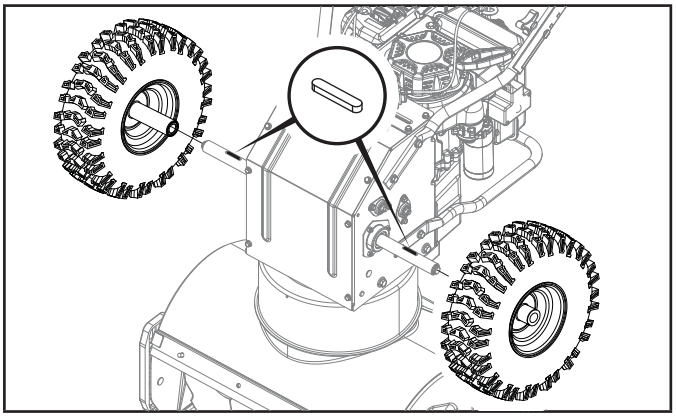

Figure 60

4. Remove the base frame cover (1) from the underside of the snowblower by removing the six M6 × 16 screws which secure it.

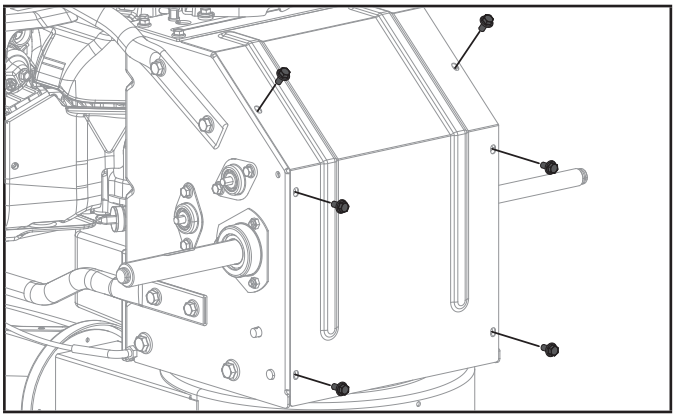

Figure 61

5. Carefully remove the M8 hex nut on each side which secures the hex shaft and chain gear shaft to the snowblower frame. Use a 19mm or adjustable wrench to hold the center of the hex shaft and use a 12mm socket to remove the nuts on each side.

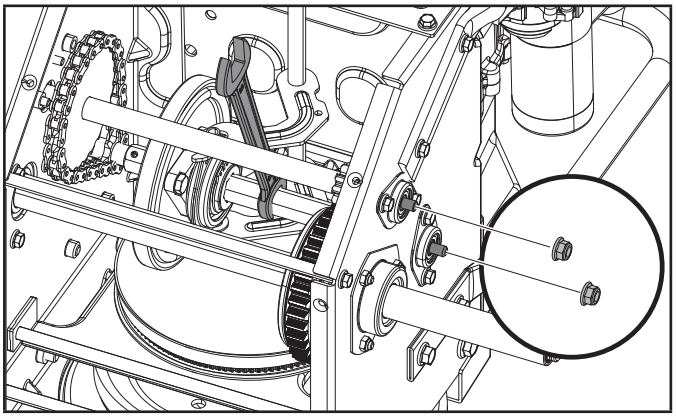

Figure 62

6. Carefully remove the M6 hex bolt on each side which secures the bearings to the snowblower frame. Use a 13mm socket to remove the nuts and bearings on each side.

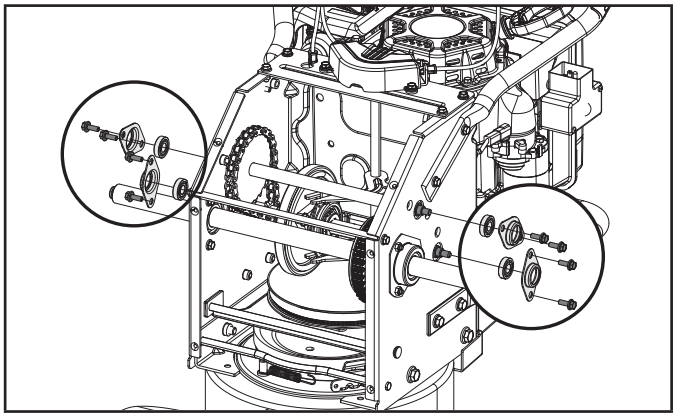

Figure 63

7. Slide the speed adjusting handle to the position 6 (fastest forward speed) and slide out the hex shaft and chain gear shaft.

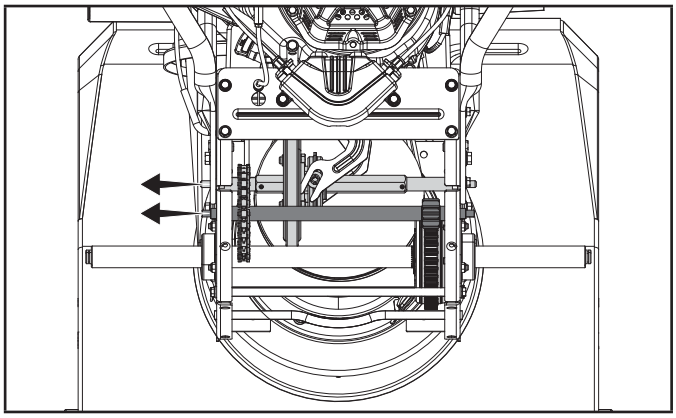

Figure 64

8. With the hex shaft removed, pull out the spring pin shown and slide the disc off.

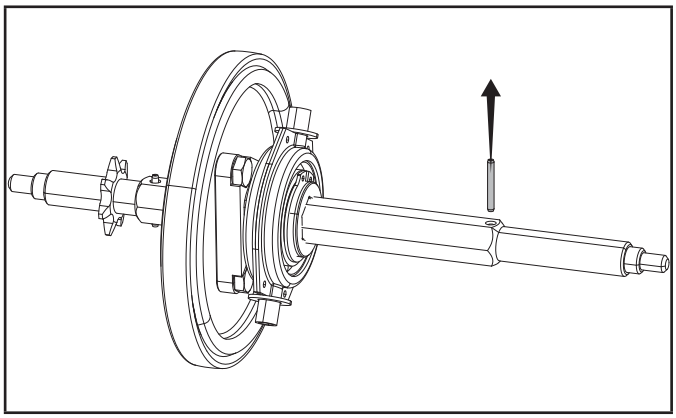

Figure 65

9. Unscrew the three M8 bolts of the friction disc assembly to discard the worn friction wheel rubber ring and replace with a new one. Use 3 new self-locking nuts to assemble a new rubber ring, do not over tighten.

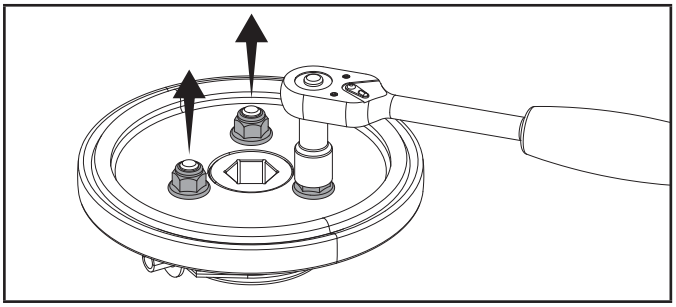

Figure 66

10. Clean the aluminum friction disc by wiping down with a clean cloth and follow the previous steps in reverse order to reassemble the parts.

Replace Shift Fork Steering Assembly

If the snowblower speed control will not move even with the engine on, check these two cables, whether the center bolts are too tight found in 'Adjusting Self-Drive Speed Control Handle Cables' section. If so, loosen the cables slightly by unthreading the center nut. If the adjustments do not correct the issues, considering replacing the gear shift fork assembly.

Make sure all fluids are removed and spark plug is disconnected.

Tools required:

– 10mm size wrench

To remove and replace your snowblower's shift fork assembly, proceed as follows:

1. See Repair or Replace Friction Disc step 1-7, as the shift fork can only be removed when the hex shaft is removed.
2. Carefully pivot the snowblower up and forward so that it rests on the auger housing. Place a piece of cardboard or moving blanket on the ground before tipping forward. Make sure all fluids are removed and spark plug is disconnected.
3. Remove the Shift Fork Cover by removing the 2 M6 × 16 screws which secures it.

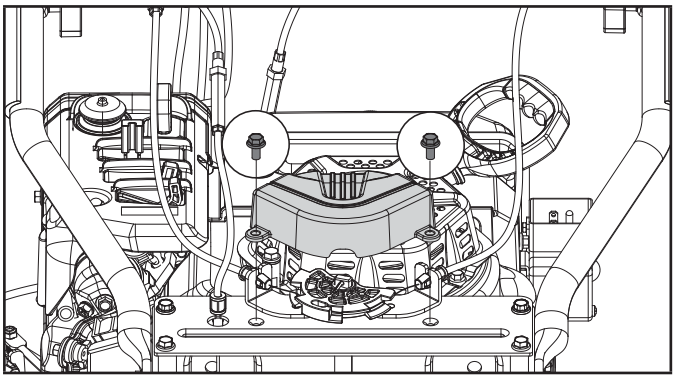

Figure 67

4. Remove the cotter pin holding the Shift Fork Steering Unit on.

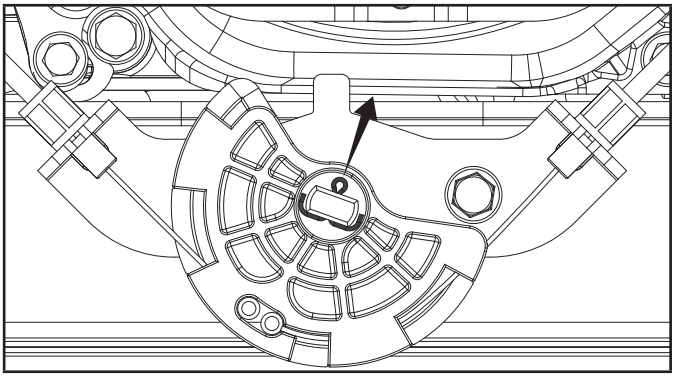

Figure 68

5. Remove the shift fork assembly plate by remove 4x M6 x16mm bolts.

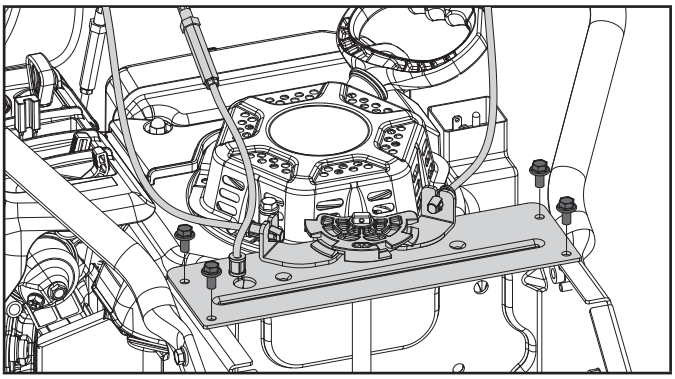

Figure 69

6. Remove the shift fork.

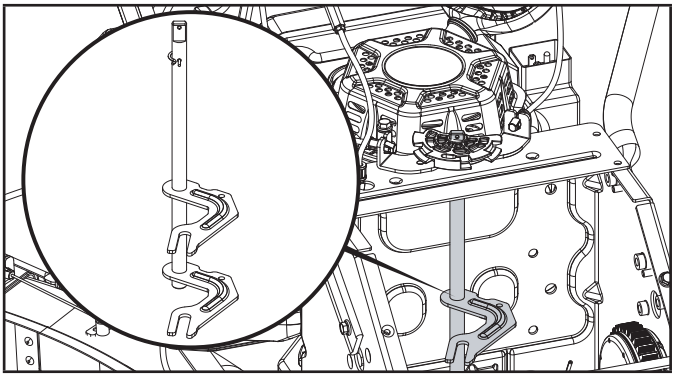

Figure 70

7. Reverse the steps to reassemble. If you find it hard to align the shift fork shaft and the plastic drive plate hole, loosen two speed control cables. Don't forget to adjust and tighten the nut in the cable adjustment in section Adjusting Self-Drive Speed Control Handle Cables.
8. Perform a speed test to confirm everything is in working order.

Valve Clearance

If set in summer: (if set at room temperature about 50°F – 86°F (10°C-30°C) intake clearance .004”-.006” (0.10~0.15 mm) exhaust clearance .006”-.008” (0.15~0.20 mm).

If set in winter: (if set in cold at < 32°F (0°C) then recommend setting a little tighter at: intake clearance .002”-.004” (0.05~0.10 mm) exhaust clearance .004”-.006” (0.10~0.15 mm).

Lubrication

No parts inside the gearbox are to be lubricated. All bearings and bushings are permanently lubricated and require no maintenance. Lubricating these parts will only result in the grease getting on to the friction wheel and disc drive plate, which could damage the rubber clad friction wheel.

Long-Term Storage

Never store the machine with gasoline in the fuel tank in a confined area with poor ventilation. Gasoline fumes could reach open flames, sparks, cigarettes, etc.

To avoid the engine freezing and problems starting the engine, leave the engine running for 5-10 minutes after your work has been completed. This will ensure all moisture will disappear that would otherwise cause starting problems.

If the machine is to be stored for a longer period than 30 days, the following procedures are recommended.

1. Mix fuel stabilizer with gasoline according to fuel stabilizer manufacturer’s directions.
2. Start the engine and let it run until it stops due to lack of fuel.
3. Change the engine oil if it has not been done for 3 months.
4. Remove the spark plug and empty a little engine oil (about 1 oz {30 mL}) in the spark plug hole. Crank the engine a couple of times. Replace the spark plug.
5. Clean the entire machine thoroughly.
6. Inspect the machine for damage, and repair if necessary.
7. Apply rust protection to the metal surfaces.
8. Store the machine indoors if possible.

Transporting

If the engine has been running, allow it to cool for at least 15 minutes before loading the machine on the transport vehicle. A hot engine and exhaust system can burn you and can ignite some materials.

Keep the engine level when transporting to reduce the possibility of fuel leakage. Move the fuel valve lever to the OFF position.

Regular Service Periods

Perform at every indicated month or operating hour interval, whichever comes first.

EACH USE

- ☐ Check oil level

EVERY MONTH OR 20 HOURS

- ☐ Change oil

EVERY 6 MONTHS OR 100 HOURS

- ☐ Change oil
- ☐ Check/clean spark plug
- ☐ Clean spark arrester

EVERY YEAR OR 150 HOURS

- ☐ Replace spark plug
- ☐ Check/adjust idle speed*
- ☐ Check/adjust valve clearance*
- ☐ Clean fuel tank and strainer*

EVERY 2 YEARS (REPLACE IF NECESSARY)

- ☐ Check fuel line

** These items should be serviced by your servicing dealer unless you have the proper tools and are mechanically proficient.*

SPECIFICATIONS

Snowblower Specifications

Model	100534
Speed Control (forward/reverse)	6 / 2
Auger Diameter	14 in. (36 cm)
Clearing Width	24 in. (61 cm)
Wheel Diameter	15 in. (38 cm)
Gross Weight	250.2 lb. (113.5 kg)
Net Weight	216 lb. (98 kg)
Length	56.4 in. (143.3 cm)
Width	26.2 in. (66.5 cm)
Height	42.7 in. (108.5 cm)

Engine Specifications

Model	R225S
Displacement	224 cc
Type	4-Stroke OHV

NOTICE

A technical bulletin regarding valve adjustment procedures is available at www.championpowerequipment.com.

Oil Specifications

DO NOT OVERFILL.

Type	0W-30
Capacity	16.9 fl. oz. (500 ml)

Recommended Engine Oil Type				
	0W-30 / 5W-30			
°F	-20	0	20	40
°C	-28.9	-17.8	-6.7	4.4
Ambient temperature				

NOTICE

Temperature will affect engine oil and engine performance. Change the type of engine oil used based on temperature shown in the *"Recommended Engine Oil Type"* table.

Fuel Specifications

Use regular unleaded gasoline with a minimum octane rating of 87 and an ethanol content of less than 10% by volume. DO NOT USE E15 or E85. DO NOT OVERFILL.

Gasoline Capacity	0.7 gal. (2.6 L)

TROUBLESHOOTING

Problem	Cause	Solution
Engine fails to start.	Engine flooded.	Repeat start attempts with throttle choke OFF.
	Water in fuel.	Drain tank and refill with fresh fuel.
	Other.	Check carefully the start procedure according to this manual.
	Red ignition key pulled out or missing	Push in red key. If key is lost, you may use a wood Popsicle stick as a temporary key until Red key is found or replaced.
Engine starts hard or runs poorly.	Spark plug issues.	Replace the spark plug.
	Fuel cap ventilation is blocked.	Clear the ventilation.
Auger does not rotate.	Foreign material caught in system.	Clean.
	Auger drive belt slipping.	Adjust the belt and wire.
	Auger drive belt broken.	Replace the belt.
	Auger control cable is out of adjustment.	Adjust Auger Control Cable.
Auger does not stop when the lever is released.	Auger drive belt is out of adjustment.	Adjust the belt.
	Auger drive guide is out of adjustment.	Adjust the guide.
	Auger control cable is out of adjustment.	Adjust Auger Control Cable.
Snowblower veers to one side.	Tire pressure not equal.	Adjust the tire pressure.
	Wheel spring lock pin is inserted on one side.	Check the wheel locks.
	Shoes are mounted unevenly.	Adjust shoes.
	Scraper blade uneven.	Adjust scraper blade and shoes.
Snowblower does not drive.	Drive cable out of adjustment.	Adjust drive cable.
	Auger drive belt worn/broken.	Replace traction drive belt.
	Friction disc worn out.	Repair or replace friction disc.

For further technical support:

Technical Support Team
Mon-Fri 8:30 AM-5:00 PM (PST/PDT)
Toll Free 1-877-338-0999
support@championpowerequipment.com

WARRANTY*

CHAMPION POWER EQUIPMENT

2 YEAR LIMITED WARRANTY

Warranty Qualifications

To register your product for warranty and FREE lifetime call center technical support please visit:

https://www.championpowerequipment.com/register

To complete registration you will need to include a copy of the purchase receipt as proof of original purchase. Proof of purchase is required for warranty service. Please register within ten (10) days from date of purchase.

Repair/Replacement Warranty

CPE warrants to the original purchaser that the mechanical and electrical components will be free of defects in material and workmanship for a period of two years (parts and labor) from the original date of purchase and 90 days (parts and labor) for commercial and industrial use. Transportation charges on product submitted for repair or replacement under this warranty are the sole responsibility of the purchaser. This warranty only applies to the original purchaser and is not transferable.

Do Not Return The Unit To The Place Of Purchase

Contact CPE's Technical Service and CPE will troubleshoot any issue via phone or e-mail. If the problem is not corrected by this method, CPE will, at its option, authorize evaluation, repair or replacement of the defective part or component at a CPE Service Center. CPE will provide you with a case number for warranty service. Please keep it for future reference. Repairs or replacements without prior authorization, or at an unauthorized repair facility, will not be covered by this warranty.

Warranty Exclusions

This warranty does not cover the following repairs and equipment:

Normal Wear

Products with mechanical and electrical components need periodic parts and service to perform well. This warranty does not cover repair when normal use has exhausted the life of a part or the equipment as a whole.

Installation, Use and Maintenance

This warranty will not apply to parts and/or labor if the product is deemed to have been misused, neglected, involved in an accident, abused, loaded beyond the product's limits, modified, installed improperly or connected incorrectly to any electrical component. Normal maintenance is not covered by this warranty and is not required to be performed at a facility or by a person authorized by CPE.

Other Exclusions

This warranty excludes:

- Cosmetic defects such as paint, decals, etc.
- Wear items such as belts, cables, shear pins, etc.
- Failures due to acts of God and other force majeure events beyond the manufacturer's control.
- Problems caused by parts that are not original Champion Power Equipment parts.

Limits of Implied Warranty and Consequential Damage

Champion Power Equipment disclaims any obligation to cover any loss of time, use of this product, freight, or any incidental or consequential claim by anyone from using this product. THIS WARRANTY AND THE ATTACHED U.S. EPA and/or CARB EMISSION CONTROL SYSTEM WARRANTIES (WHEN APPLICABLE) ARE IN LIEU OF ALL OTHER WARRANTIES, EXPRESS OR IMPLIED, INCLUDING WARRANTIES OF MERCHANTABILITY OR FITNESS FOR A PARTICULAR PURPOSE.

A unit provided as an exchange will be subject to the warranty of the original unit. The length of the warranty governing the exchanged unit will remain calculated by reference to the purchase date of the original unit.

This warranty gives you certain legal rights which may change from state to state or province to province. Your state or province may also have other rights you may be entitled to that are not listed within this warranty.

Contact Information

Address

Champion Power Equipment, Inc.
12039 Smith Ave.
Santa Fe Springs, CA 90670 USA
www.championpowerequipment.com

Customer Service

Toll Free: 1-877-338-0999
info@championpowerequipment.com
Fax no.: 1-562-236-9429

Technical Service

Toll Free: 1-877-338-0999
tech@championpowerequipment.com
❗ EMERGENCY 24 HOUR SUPPORT: 1-562-204-1188

*Except as otherwise stipulated in any of the following enclosed Emission Control System Warranties (when applicable) for the Emission Control System: U.S. Environment Protection Agency (EPA) and/or California Air Resources Board (CARB).

CHAMPION POWER EQUIPMENT, INC. (CPE)
AND THE UNITED STATES ENVIRONMENTAL PROTECTION AGENCY (U.S. EPA)
EMISSION CONTROL SYSTEM WARRANTY

Your Champion Power Equipment (CPE) engine complies with U.S. EPA emissions regulations.

YOUR WARRANTY RIGHTS AND OBLIGATIONS:

The US EPA and CPE are pleased to explain the Federal Emission Control Systems Warranty on your 2022 small off-road engine (SORE) and engine powered equipment. New engines and equipment must be designed, built and equipped, at the time of sale, to meet U.S. EPA regulations for small off-road engines (SORE). CPE warrants the emission control system on your small off-road engine (SORE) and equipment for the period of time listed below, provided there has been no abuse, neglect, unapproved modification, or improper maintenance of your equipment.

Your emission control system may include parts such as the carburetor, fuel-injection system, the ignition system, catalytic converter and fuel lines. Also included may be hoses, belts, connectors and other emission related assemblies. Where a warrantable condition exits, CPE will repair your small off-road engine (SORE) at no cost to you including diagnosis, parts and labor.

MANUFACTURER'S EMISSION CONTROL SYSTEM WARRANTY COVERAGE:

This emission control system is warranted for two years, subject to provisions set forth below. If, during the warranty period, an emission related part on your engine is defective in materials or workmanship, the part will be repaired or replaced by CPE.

OWNER WARRANTY RESPONSIBILITIES:

As the small off-road engine (SORE) owner, you are responsible for the performance of the required maintenance listed in your Owner's Manual. CPE recommends that you retain all your receipts covering maintenance on your small off-road engine, but CPE cannot deny warranty solely for the lack of receipts or for your failure to ensure the performance of all scheduled maintenance.

As the small off-road engine (SORE) owner, you should however be aware that CPE may deny you warranty coverage if your small, off-road engine (SORE) or a part has failed due to abuse, neglect, improper maintenance or unapproved modifications.

You are responsible for presenting your small off-road engine (SORE) to an Authorized CPE service outlet or alternate service outlet as described in (3)(f.) below, CPE dealer or CPE, Santa Fe Springs, Ca. as soon as a problem exists. The warranty repairs should be completed in a reasonable amount of time, not to exceed 30 days.

If you have any questions regarding your warranty rights and responsibilities, you should contact:

Champion Power Equipment, Inc.
Customer Service
12039 Smith Ave.
Santa Fe Springs, CA 90670
1-877-338-0999
tech@championpowerequipment.com

EMISSION CONTROL SYSTEM WARRANTY

The following are specific provisions relative to your Emission Control System (ECS) Warranty Coverage.

1. **APPLICABILITY:** This warranty shall apply to 1997 and later model year small off-road engines (SORE). The ECS Warranty Period shall begin on the date the new engine or equipment is delivered to its original, end-use purchaser, and shall continue for 24 consecutive months thereafter.

2. **GENERAL EMISSIONS WARRANTY COVERAGE**
   CPE warrants to the original, end-use purchaser of the new engine or equipment and to each subsequent purchaser that each of its small off-road engines (SORE) is:

   2a. Designed, built and equipped so as to conform to U.S. EPA emissions standards for spark-ignited engines at or below 19 kilowatts.

   2b. Free from defects in materials and workmanship that cause the failure of a warranted part to be identical in all material respects to the part as described in the engine manufacturer's application for certification for a period of two years.

3. **THE WARRANTY ON EMISSION-RELATED PARTS WILL BE INTERPRETED AS FOLLOWS:**

   3a. Any warranted part that is not scheduled for replacement as required maintenance in the Owners Manual shall be warranted for the ECS Warranty Period. If any such part fails during the ECS Warranty Period, it shall be repaired or replaced by CPE according to Subsection "d" below. Any such part repaired or replaced under the ECS Warranty shall be warranted for any remainder of the ECS Warranty Period.

   3b. Any warranted, emissions-related part which is scheduled only for regular inspection as specified in the Owners Manual shall be warranted for the ECS Warranty Period. A statement in such written instructions to the effect of "repair or replace as necessary", shall not reduce the ECS Warranty Period. Any such part repaired or replaced under the ECS Warranty shall be warranted for the remainder of the ECS Warranty Period.

   3c. Any warranted, emissions-related part which is scheduled for replacement as required maintenance in the Owner's Manual shall be warranted for the period of time prior to the first scheduled replacement point for that part. If the part fails prior to the first scheduled replacement, the part shall be repaired or replaced by CPE according to Subsection "d" below. Any such emissions-related part repaired or replaced under the ECS Warranty, shall be warranted for the remainder of the ECS Warranty Period prior to the first scheduled replacement point for such emissions-related part.

   3d. Repair or replacement of any warranted, emissions-related part under this ECS Warranty shall be performed at no charge to the owner at a CPE Authorized Service Outlet.

   3e. The owner shall not be charged for diagnostic labor which leads to the determination that a part covered by the ECS Warranty is in fact defective, provided that such diagnostic work is performed at a CPE Authorized Service Outlet.

   3f. CPE shall pay for covered emissions warranty repairs at non-authorized service outlets under the following circumstances:

      i. The service is required in a population center with a population over 100,000 according to U.S. Census 2000 without a CPE Authorized Service Outlet AND

      ii. The service is required more than 100 miles from a CPE Authorized Service Outlet. The 100 mile limitation does not apply in the following states: Alaska, Arizona, Colorado, Hawaii, Idaho, Montana, Nebraska, Nevada, New Mexico, Oregon, Texas, Utah and Wyoming.

   3g. CPE shall be liable for damages to other original engine components or approved modifications proximately caused by a failure under warranty of an emission-related part covered by the ECS Warranty.

   3h. Throughout the ECS Warranty Period, CPE shall maintain a supply of warranted emission-related parts sufficient to meet the expected demand for such emission-related parts.

   3i. Any CPE Authorized and approved emission-related replacement part may be used in the performance of any ECS Warranty maintenance or repair and will be provided without charge to the owner. Such use shall not reduce CPE's warranty obligation.

   3j. Unapproved add-on or modified parts may not be used to modify or repair a CPE engine. Such use voids this ECS Warranty and shall be sufficient grounds for disallowing an ECS Warranty claim. CPE shall not be liable hereunder for failures of any warranted parts of a CPE engine caused by the use of such an unapproved add-on or modified part.

EMISSION-RELATED PARTS INCLUDE THE FOLLOWING: (using those portions of the list applicable to the engine)

Systems covered by this warranty	Parts Description
Fuel Metering System	Fuel regulator, Carburetor and internal parts
Air Induction System	Air cleaner, Intake manifold
Ignition System	Spark plug and parts, Magneto ignition system
Exhaust System	Exhaust manifold, catalytic converter
Miscellaneous Parts	Tubing, Fittings, Seals, Gaskets, and Clamps associated with these listed systems.
Evaporative Emissions	Fuel Tank, Fuel Cap, Fuel Lines (for liquid fuel and fuel vapors), Fuel Line Fittings, Clamps, Pressure Relief Valves, Control Valves, Control Solenoids, Electronic Controls, Vacuum Control Diaphragms, Control Cables, Control Linkages, Purge Valves, Gaskets, Liquid/Vapor Separator, Carbon Canister, Canister Mounting Brackets, Carburetor Purge Port Connector

TO OBTAIN WARRANTY SERVICE:

You must take your CPE engine or the product on which it is installed, along with your warranty registration card or other proof of original purchase date, at your expense, to any Champion Power Equipment dealer who is authorized by Champion Power Equipment, Inc. to sell and service that CPE product during his normal business hours. Alternate service locations defined in Section (3)(f.) above must be approved by CPE prior to service. Claims for repair or adjustment found to be caused solely by defects in material or workmanship will not be denied because the engine was not properly maintained and used.

If you have any questions regarding your warranty rights and responsibilities, or to obtain warranty service, please write or call Customer Service at Champion Power Equipment, Inc.

Champion Power Equipment, Inc.
12039 Smith Ave.
Santa Fe Springs, CA 90670
1-877-338-0999
Attn.: Customer Service
tech@championpowerequipment.com