CHAMPION POWER EQUIPMENT™-MC

Champion Power Equipment, Inc., Santa Fe Springs, CA USA

MODEL #100379

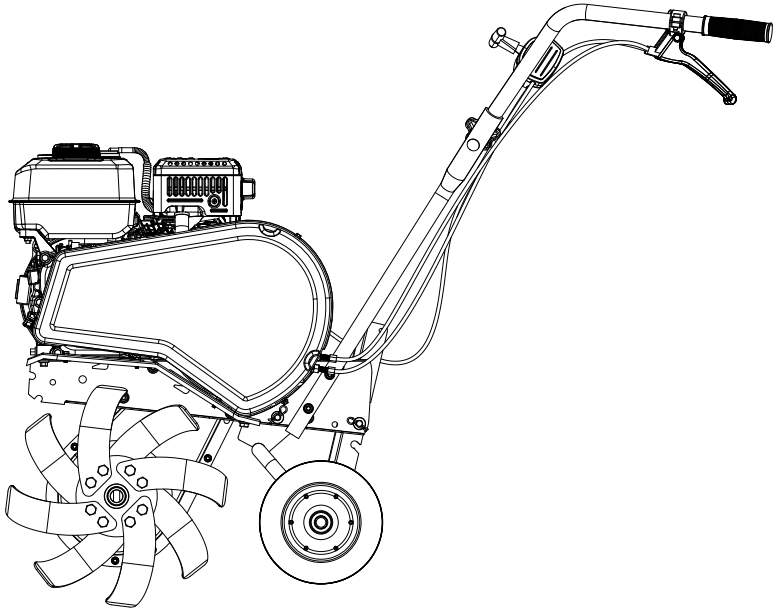

PARTS INFORMATION

FRONT TINE TILLER

SERIAL NUMBER RANGE: ALL

To order replacement parts please visit:
shop.championpowerequipment.com
or call **1-877-338-0999.**

REV 20220825

TABLE OF CONTENTS

Tiller Parts Diagram 3
Tiller Parts List 4
Tiller Engine Parts Diagram - R210III 7
Tiller Engine Parts List - R210III 8
Tiller Engine Parts Diagram - R210P 10
Tiller Engine Parts List - R210P 11
Tiller Engine Parts Diagram - GB215 15
Tiller Engine Parts List - GB215 16

TILLER PARTS DIAGRAM

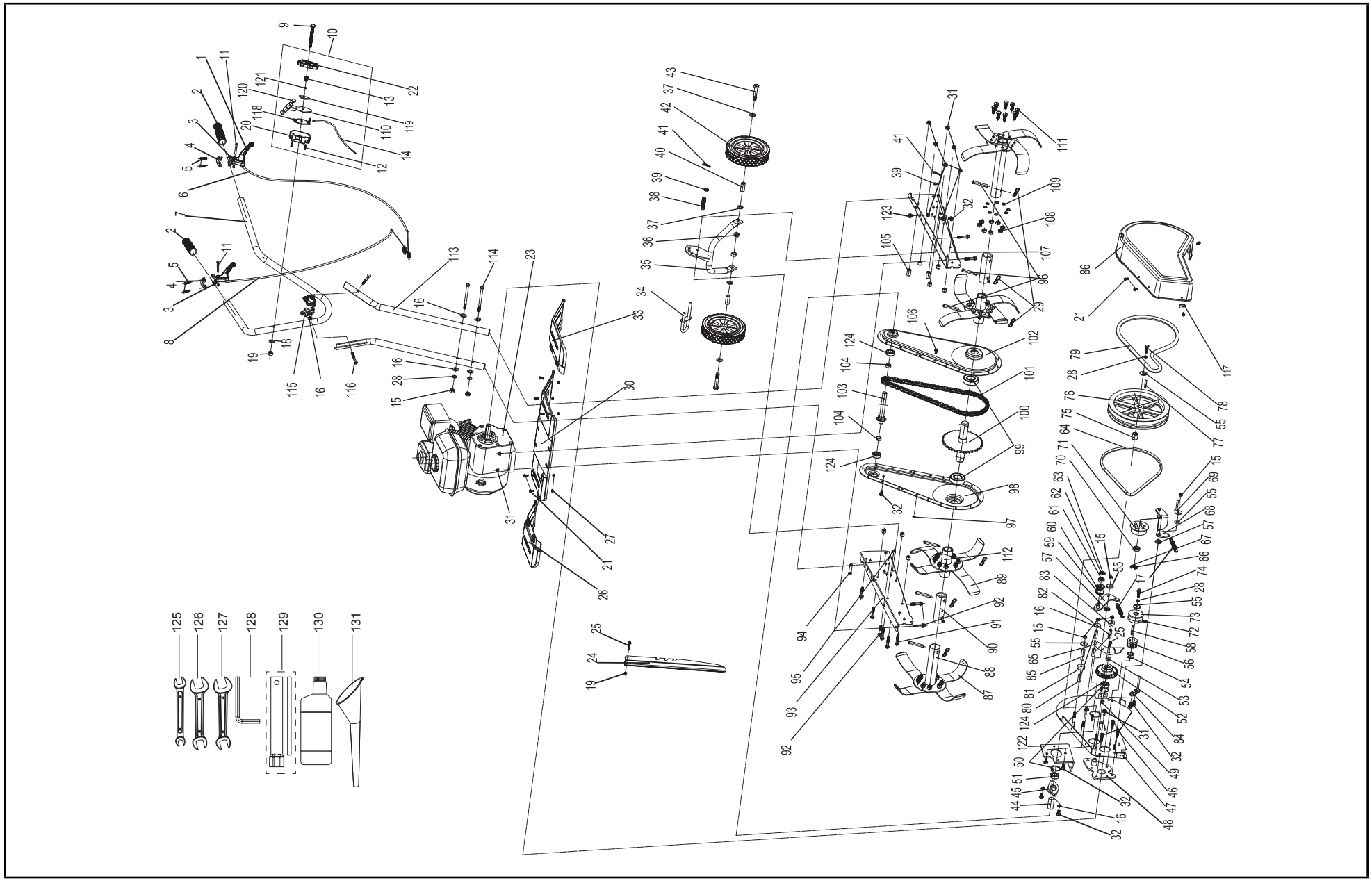

TILLER PARTS LIST

#	Part Number	Description	Qty.
1	100379-001	Clutch Lever	2
2	100379-002	Handlebar Grip	2
3	100379-003.2	Bottom Clutch Lever Holder, Black	2
4	100379-004.2	Upper Clutch Lever Holder, Black	2
5	100379-005	Screw M6 × 20	4
6	100379-006	Reverse Clutch Cable	1
7	100379-007.2	Handlebar, Black	1
8	100379-008	Forward Clutch Cable	1
9	100379-009	Bolt M6 × 60	1
10	100379-010	Throttle Switch	1
11	100379-011	Suit Rivet	2
12	100379-012	Self-tapping Screw M3 × 20	2
13	100379-013	Rivet	1
14	100379-014	Throttle Cable	1
15	100379-015	Locknut M8	7
16	100379-016	Flat Washer Ø8	9
17	100379-017	Tension Spring	2
18	100379-019	Flat Washer Ø6	1
19	100379-020	Locknut M6	2
20	100379-021	Left Throttle Switch Box	1
21	100379-022	Bolt M5 × 12	11
22	100379-023	Right Throttle Switch Box	1
23	100379-024	Engine(Yellow/Black)	1
	S/N: <19AUG0540		
	R210P-B01KY		
	S/N: >2020May0001 S/N: <21JUL2430		
	GB215		
	S/N: >NP21100500001 S/N: >WR21102200001		

#	Part Number	Description	Qty.
24	100379-025.2	Resistance Pole, Black	1
25	100379-026	Flange Bolt M6 × 35	2
26	100379-027.48	Left Extension Fenderboard, Yellow	1
27	100379-028	Flange Locknut M5	6
28	100379-029	Spring Washer Ø8	4
29	100379-129	B Clip Ø2	6
30	100379-031.48	Fenderboard, Yellow	1
31	100379-032	Flange Locknut M8	15
32	100379-033	Flange Bolt M8 × 16	9
33	100379-034.48	Right Extension Fenderboard	1
34	100379-035	Wheel Adjusting Pole	1
35	100379-036.2	Wheel Bracket, Black	1
36	100379-037	Locknut M12	2
37	100379-038	Flat Washer Ø12	4
38	100379-039	Adjusting Press Spring	1
39	100379-040	Gasket Ø10	2
40	100379-041	Axle Bushing	2
41	100379-042	B Uncork Pin Ø2 × 37	2
42	100379-043.48	Wheel 8", Yellow	2
43	100379-044	Bolt M12 × 65	2
44	100379-130	Bushing, Fixation Board	1
45	100379-047	Bearing Seat	1
46	100379-048	Flange Bolt M8 × 25	4
47	100379-049.2	Fixation Board, Black	1
48	100379-050	Fixation Board, Big Gear	1
49	100379-051	Bushing, Big Gear	1
50	100379-052	Circlip 35	2
51	100379-053	Bearing 6003	1
52	100379-054	Big Gear	1
53	100379-055	Fixation Washer, Big Gear	1

TILLER PARTS LIST

#	Part Number	Description	Qty.
54	100379-056	Bushing, Small Belt Wheel	1
55	100379-057	Flat Washer Ø8 × Ø28 × 3	5
56	100379-058	Small Gear	1
57	100379-059	Tension Bushing	2
58	100379-060	Flat Key 4.75 × 4.75 × 42	1
59	100379-061	Reverse Tension Arm	1
60	100379-062	Tension Pulley Reverse	1
61	100379-063	Bearing 628	1
62	100379-064	Circlip 8	1
63	100379-065	Circlip 24	1
64	100379-066	Reverse Belt M-37	1
65	100379-067	Belt Guard Assembly	1
66	100379-068	Circlip 12	1
67	100379-069	Circlip 28	1
68	100379-070	Forward Tension Arm	1
69	100379-071	Forward Belt Baffle	1
70	100379-072	Bearing 6001	1
71	100379-073	Forward Tension Pulley	1
72	100379-074	Screw M6 × 16	1
73	100379-075	Forward Small Belt Wheel	1
74	100379-128	Bolt 5/16-24UNF-L=35	1
75	100379-131	Bushing, Big Belt Wheel	1
76	100379-078	Big Belt Wheel	1
77	100379-079	Flat Key 5 × 5 × 35	1
78	100379-080	Bolt M8 × 25	1
79	100379-081	Forward Belt 17 × 1070	1
80	100379-082	Back Belt Block Tube 1	2
81	100379-083	Tension Bushing	1
82	100379-084	Front Belt Block Tube	2
83	100379-085	Belt Block Bushing	1
84	100379-086	Big Belt Block Pole	1
85	100379-087	Back Belt Block Tube 2	1

#	Part Number	Description	Qty.
86	100379-088	Belt Guard	1
87	100379-091.2	Right Blade, Black	8
88	100379-090.2	Blade Holder 2, Black	2
89	100379-089.2	Left Blade, Black	8
90	100379-092.2	To Take Over, Black	2
91	100379-093	Flange Bolt M8 × 45	4
92	100379-094	Flange Bolt M8 × 40	6
93	100379-095.48	Right Base, Yellow	1
94	100379-096	Pin Roll Ø10 × 40	1
95	100379-097	Bushing, Case	8
96	100379-098	Pin Roll Ø10 × 50	6
97	100379-099	Flange Locknut M6	16
98	100379-100.2	Right Case, Black	1
99	100379-101	Bearing 6206	2
100	100379-102	Big Chain Wheel	1
101	100379-103	Chain 08B-1-80	1
102	100379-104.2	Left Case, Black	1
103	100379-105	Small Chain Wheel	1
104	100379-106	Bushing, Small Chain Wheel	2
105	100379-107	Bushing, Base	2
106	100380-096	Flange Screw M6 × 12	16
107	100379-109.48	Left Base, Yellow	1
108	100379-110	Nut M10 × 1	32
109	100379-111	Spring Washer Ø10	32
110	100379-112.1	The Accelerator Components In Hand, Black	1
111	100379-113	Bolt M10 × 1 × 25	32
112	100379-114.2	Blade Holder 1, Black	2
113	100379-115.2	Handlebar Arm, Black	2
114	100379-116	Outer Hex Bolt M8 × 120	2
115	100379-117	Handlebar Knob	2
116	100379-118	Round Head Square Neck Ccrew M8 × 50	2
117	100379-119	Flat Washer Ø5 × Ø16 × 1.5	1

#	Part Number	Description	Qty.
118	100379-120	The Throttle Switch Fixed Plate	1
119	100379-121	Positioning Plate	1
120	100379-122	Plug	2
121	100379-123	Saddle Elastic Washer Ø10	1
122	100379-124.2	Fixed Plate	1
123	100379-125	Flange Bolt M8 × 20	1
124	100379-132	Bearing 6003 (C&U)	3
125	100380-1000	Open End Wrench 8-10mm	1
126	100380-1020	Open End Wrench 13-16mm	1
127	100380-1030	Open End Wrench 13-17mm	1
128	100380-1050	Hex key wrench 5mm	1
129	93130-Z010110-0101	Spark Plug Wrench(engine)	1
130	100158273	0.5L_SG10W30	1
131	93106-Z010110-0001	Oil Funnel	1

TILLER ENGINE PARTS DIAGRAM - R210III

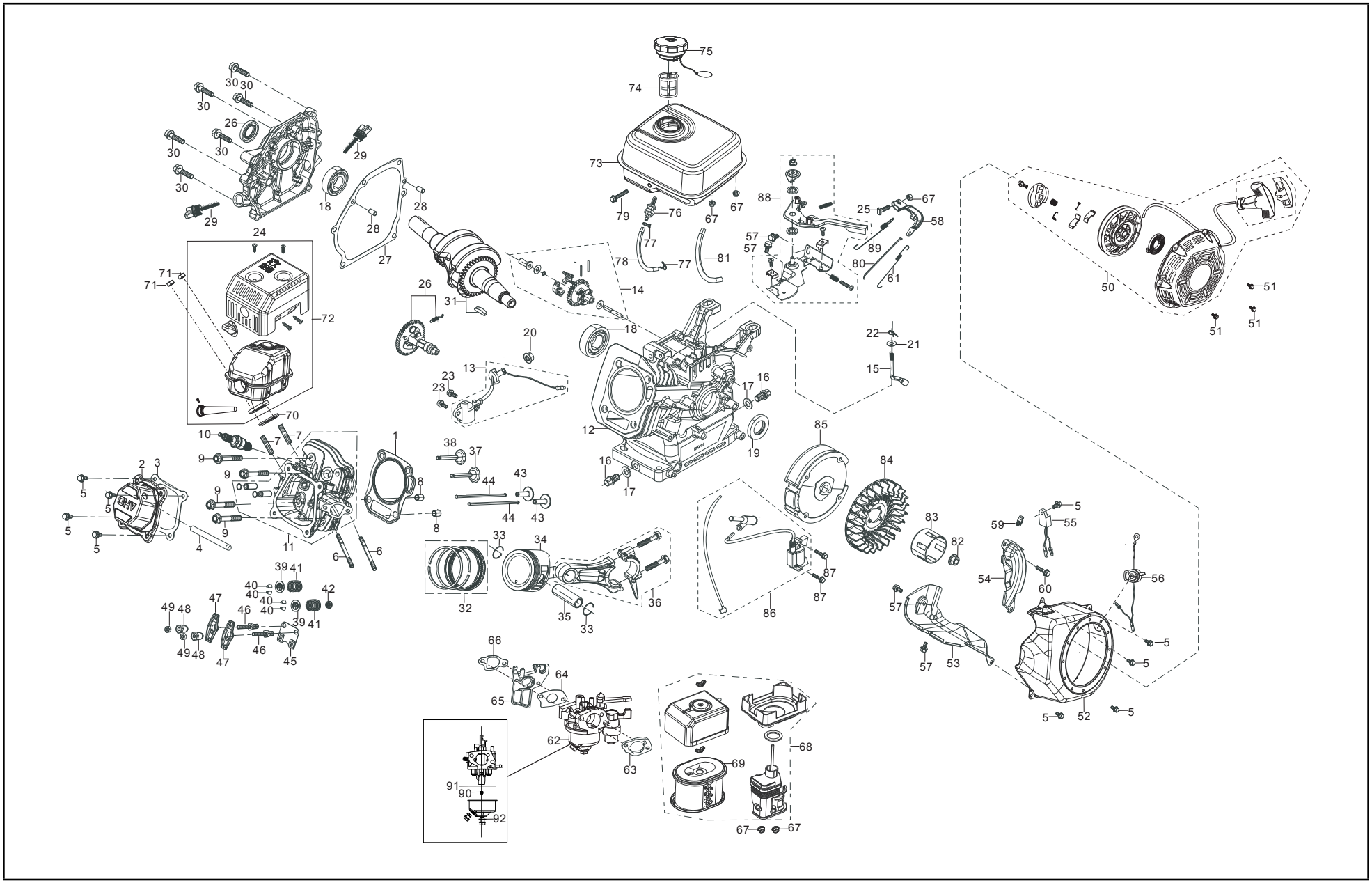

TILLER ENGINE PARTS LIST - R210III

#	Part Number	Description	Qty.
1	12131-Z950110-0000	Gasket, Cylinder Head	1
2	12410-Z440110-0099	Cover Subassembly, Cylinder Head	1
3	12004-Z440110-0000	Gasket, Cylinder Head Cover	1
4	17004-Z440110-0000	Tube, Breather, Ø8 × Ø12 × 90	1
5	90001-0612-01	Bolt, M6 × 12	9
6	90204-Z010310-0000	Stud, M6 × 113	2
7	90203-Z010110-0000	Stud, M8 × 34	2
8	90502-1114-00	Pin, d=11 L=14	2
9	12003-Z010110-0000	Bolt, Cylinder Head, M8 × 60	4
10	30010-Z010110-0000	Plug, Spark, M14 × 1.25-6e L=81, F6RTC	1
11	12140-Z810210-0000	Head Subassembly, Cylinder	1
12	11310-Z530420-0099	Crankcase Subassembly	1
13	37060-Z010120-0000	Sensor, Engine Oil	1
14	16400-Z010110-0000	Gear Assembly, Governor	1
15	16061-Z010110-0000	Arm, Governor	1
16	11007-Z010110-0000	Bolt, Drain Plug, M10 × 1.25 × 15	2
17	90408-Z010110-0000	Washer, Ø10 × 1.25 × Ø15	2
18	90547-0205-CL	Bearing, Ø25 × Ø52 × 15	2
19	90682-Z300110-0000	Seal, Oil d=25 D=41.25 b=6	2
20	90305-Z010210-01	Nut, M10	1
21	90408-Z010210-0000	Washer, Ø6.2 × Ø15 × 0.6	1
22	90501-Z010110-0000	Cotter Pin, Ø1.2 L=26	1
23	90001-0614-01	Bolt, M6 × 14	2
24	11411-Z440310-0000	Cover, Crankcase	1
25	16072-Z010110-0000	Bolt, Governor Support, M6 × 21	1
26	14200-530210-0099	Camshaft Assembly	1
27	11001-Z440110-0000	Gasket, Crankcase	1
28	90502-0912-00	Pin, d=9 L=12	2
29	15010-Z290110-0B00	Dipstick Subassembly, Oil	2
30	90001-0832-01	Bolt, M8 × 32	6

#	Part Number	Description	Qty.
31	13300-Z533210-0000	Crankshaft Assembly	1
32	13200-Z140210-0099	Piston Ring Assembly	1
33	13122-Z010110-0000	Clip, Piston Pin	2
34	13111-Z140220-0099	Piston	1
35	13121-Z010110-0000	Pin, Piston	1
36	13010-Z440210-0099	Rod, Connecting	1
37	12110-Z810110-0099	Intake Valve	1
38	12110-Z810120-0099	Exhaust Valve	1
39	12112-Z810210-0000	Seat, Valve Spring	2
40	12109-Z810110-0000	Lock Clamp, Valve	4
41	12103-Z010110-0000	Spring, Valve	2
42	12101-Z810210-0000	Guide, Seal	1
43	14081-Z040110-0000	Tappet, Valve	2
44	14071-Z440110-0000	Lifter, Valve	2
45	14090-Z010110-0000	Plate Subassembly, Lifter Stopper	1
46	14313-Z010110-0000	Bolt, Valve Adjusting	2
47	14311-Z010110-0000	Rocker, Valve	2
48	14314-Z010110-0000	Nut, Valve Adjusting	2
49	14312-Z010110-0000	Nut, Valve Lock	2
50	28200-Z300110-H600	Starter Assembly, Recoil, Black	1
51	90001-0608-01	Bolt, M6 × 8	3
52	28110-Z010410-0B00	Shroud, PMS 109 C	1
53	19304-Z010610-0000	Shroud, Cylinder Body	1
54	19340-Z010120-0000	Shield, Lower	1
55	37050-Z010210-0000	Protector, Oil	1
56	35540-Z060140-Q200	Switch Subassembly, Stop Engine	1
57	90001-0610-01	Bolt, M6 × 10	4
58	16070-Z010110-0000	Support Subassembly, Governor	1
59	90740-Z010110-0000	Collar, Ø15	1
60	90001-0616-01	Bolt, M6 × 16	1

TILLER ENGINE PARTS LIST - R210III

#	Part Number	Description	Qty.
61	16012-Z010110-0000	Spring, Throttle Valve Returning	1
62	16100-Z530610-0709	Carburetor Assembly	1
63	17001-Z010210-0000	Gasket, Air Cleaner	1
64	16001-Z010110-0000	Gasket, Carburetor	1
65	16003-Z010110-0000	Plate, Carburetor Insulator	1
66	16002-Z050110-0000	Gasket, Carburetor Insulator	1
67	90305-0600-31	Nut, M6	5
68	17100-Z010210-0000	Air Cleaner Assembly, Black	1
69	17150-Z010110-0000	Element, Air Cleaner	1
70	18001-Z440110-0000	Gasket, Exhaust Outlet	1
71	90303-0800-31	Nut, M8	2
72	18100-Z012610-H300	Muffler Assembly, Black	1
73	16620-Z440410-H600	Fuel Tank, Black	1
74	16652-Z010710-0000	Strainer, Fuel	1
75	16730-Z440210-LK00	Fuel Tank Cap, Black	1
76	16680-Z010110-0000	Outlet Subassembly, Fuel Tank Oil	1
77	90740-Z010210-0000	Collar, Ø7.5	2
78	90686-Z010710-0000	Tube, Fuel, Ø4.5 × Ø8.5 × 160	1
79	90001-0630-01	Bolt, M6 × 30	1
80	16062-Z010110-0000	Rod, Governeor	1
81	30431-Z010110-0000	Jacket, Rubber	1
82	13501-Z010110-0000	Nut, Flywheel, M14 × 1.5	1
83	28002-Z010310-0000	Pulley, Starter	1
84	19352-Z440110-0000	Cooling Fan	1
85	13510-Z440410-0000	Flywheel Subassembly	1
86	30400-Z440110-0100	Coil, Ignition	1
87	90001-0625-01	Bolt, M6 × 25	2
88	16520-Z010430-0001	Control Assembly, Throttle	1
89	16063-Z050510-0000	Spring, Governor	1

#	Part Number	Description	Qty.
90	16161-Z030310-0000	Main Jet, H128 × 0.91, Standard	1
	16161-Z010310-0000	Main Jet, H128 × 0.94, Altitude 3000-6000 feet	
	16161-Z050210-0000	Main Jet, H128 × 0.97, Altitude 6000-8000 feet	
91	16112-Z010110-0000	Seal Ring, Float	1
92	90681-Z010510-0000	Seal Ring	1

TILLER ENGINE PARTS DIAGRAM - R210P

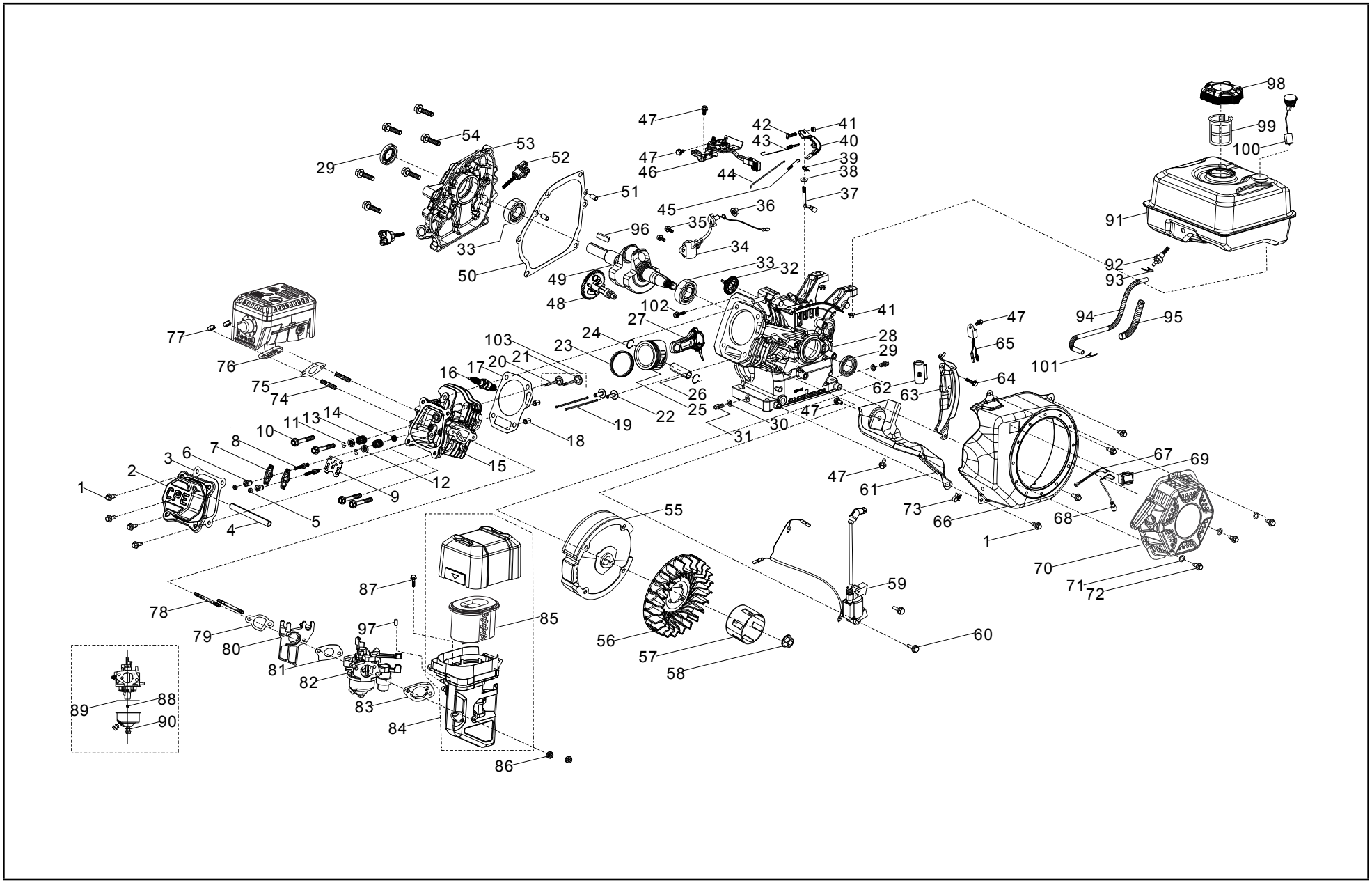

TILLER ENGINE PARTS LIST - R210P

#	Part Number	Description	Qty.
1	90001-0612-0101	Hexagon Flange Bolt, M6 x 12, Blue White Zinc	8
2	12410-Z440110-0001	Cylinder Head Cover Subassembly, Blue White Zinc	1
3	12004-Z440110-00A0	Cylinder Head Cover Gasket	1
4	17004-Z440110-0002	Tube, Breather, Ø8 x Ø12 x 90	1
5	14312-Z010110-0000	Valve Lock Nut	2
6	14314-Z010110-0000	Valve Adjusting Nut	2
7	14311-Z010110-0000	Valve Rocker	2
8	14313-Z010110-0000	Valve Adjusting Bolt	2
9	14090-Z010110-0000	Lifter Stopper Plate Subassembly, Blue White Zinc	1
10	12003-Z010110-0001	Cylinder Head Bolt, M8 x 60, Blue White Zinc	4
11	12109-Z810110-0000	Valve Lock Clamp	4
12	12112-Z810210-0000	Valve Spring Retainer	2
13	12103-Z010110-0000	Valve Spring	2
14	12101-Z810210-0000	Seal Guide	1
15	12140-Z810210-00A0	Cylinder Head Subassembly	1
16	30010-Z010110-0000	Spark Plug, F6RTC	1
17	12131-Z950110-0000	Cylinder Head Gasket	1
18	90502-1114-00	Pin, 11 x 14	2
	S/N: <20DEC3061		
	90502-1114-00A0		
	S/N: >21MAR0001		
19	14071-Z440110-0000	Valve Lifter	2
20	12121-Z810120-0000	Exhaust Valve	1
21	12111-Z810110-0000	Inlet Valve	1
22	14081-Z040110-0000	Valve Tappet	2
23	13200-Z140210-00A9	Piston Ring Assembly	1
24	13122-Z010110-0000	Piston Pin Clip	2

#	Part Number	Description	Qty.
25	13111-Z140220-0099	Piston	1
26	13121-Z010110-0000	Piston Pin, Ø18 x Ø54	1
27	13010-Z440210-00A9	Connecting Rod	1
28	11310-Z530420-00A9	Crankcase Subassembly	1
29	90682-Z300110-0001	Oil Seal, Ø25 x Ø41.25 x 6	2
30	90408-Z010110-0000	Washer, Ø10 x Ø15.8 x 1.5	2
	S/N: <20DEC3061		
	90408-Z010110-00A0		
	S/N: >21MAR0001		
31	11007-Z010110-0001	Drain Plug Bolt, M10 x1.25 x15, Blue White Zinc	2
32	16400-Z010110-0000	Governor Gear Assembly	1
33	90547-0205-00	Bearing	2
	S/N: <20DEC3061		
	90547-0205-00A0		
	S/N: >21MAR0001		
34	37060-Z010120-0001	Engine oil Sensor, W/O Nut	1
35	90001-0614-01	Hexagon Flange Bolt, M6 x 14, Blue White Zinc	2
	S/N: <20DEC3061		
	90001-0614-01A0		
	S/N: >21MAR0001		
36	90305-Z010210-0101	Hexagon Flange Nut, M10, Blue White Zinc	1
37	16061-Z010110-0000	Governor Arm	1
38	90001-0614-01	Washer, Ø6.2 x Ø15 x 0.6	1
	S/N: <20DEC3061		
	90001-0614-01A0		
	S/N: >21MAR0001		
39	90501-Z010110-0001	Pin, Blue White Zinc	1
40	16070-Z010110-0001	Governor Support Subassembly, Blue White Zinc	1

TILLER ENGINE PARTS LIST - R210P

#	Part Number	Description	Qty.
41	90305-0600-3101	Hexagon Flange Nut, M6, Blue White Zinc	3
42	16072-Z010110-0001	Governor Support Bolt, M6 x 21, Blue White Zinc	1
43	16063-Z050710-0001	Spring, Governor	1
44	16062-Z010110-0001	Governeor Rod, Blue White Zinc	1
45	16012-Z010310-0000	Throttle Valve Returning Spring	1
46	16520-Z012211-0003	Throttle Control Assembly, Blue White Zinc	1
	S/N: <20DEC3061		
	16520-Z012212-0003		
	S/N: >21MAR0001		
47	90001-0610-0101	Hexagon Flange Bolt, M6 x 10, Blue White Zinc	5
	S/N: <20DEC3061		
	90001-0610-01A1		
	S/N: >21MAR0001		
48	14200-Z530110-0099	Camshaft Assembly	1
49	13300-Z533210-0000	Crankshaft Assembly	1
	S/N: <20DEC3061		
	13300-Z533210-0000		
	S/N: >21MAR0001		
50	11001-Z440110-00A0	Crankcase Gasket	1
51	90502-0912-00	Pin, 9 x 12	2
	S/N: <20DEC3061		
	90502-0912-00A0		
	S/N: >21MAR0001		
52	15010-Z290110-L401	Oil Dipstick Subassembly	2
53	11411-Z440310-00A0	Crankcase Cover	1
54	90001-0832-0101	Hexagon Flange Bolt, M8 x 32, Blue White Zinc	6
55	13510-Z440410-0000	Flywheel Subassembly	1
56	19352-Z440110-0001	Impeller	1
57	28002-Z0L0110-0000	Starter Pulley, Blue White Zinc	1

#	Part Number	Description	Qty.
58	13501-Z010110-0000	Flywheel Nut, M14 x 1.5, Blue White Zinc	1
	S/N: <20DEC3061		
	13501-Z010110-00A0		
	S/N: >21MAR0001		
59	30400-Z441010-0001	Ignition Coil	1
60	90001-0625-01	Hexagon Flange Bolt, M6 x 25, Blue White Zinc	2
61	19304-Z010610-0001	Cylinder Body Shroud, Blue White Zinc	1
62	90684-Z010410-0001	Clip	1
	S/N: <20DEC3061		
	90684-Z010510-0000		
	S/N: >21MAR0001		
63	19340-Z010510-LS01	Lower Shield, Blue White Zinc	1
	S/N: <20DEC3061		
	19340-Z011010-0000		
	S/N: >21MAR0001		
64	90001-0616-01	Hexagon Flange Bolt, M6 x 16, Blue White Zinc	1
	S/N: <20DEC3061		
	90001-0616-01A0		
	S/N: >21MAR0001		
65	37050-Z010210-0001	Oil Protector, Blue White Zinc	1
66	28110-Z810310-L400	Shroud	1
67	35555-Z810110-0000	Switch Connector Grounding Wire	1
68	35541-Z010610-0000	Stop Engine Connecting Wire	1
69	35540-Z010610-R901	Stop Engine Switch Subassembly	1
70	28200-Z141010-H301	Recoil Starter Assembly	1
	S/N: <20DEC3061		
	28200-Z141010-H200		
	S/N: >21MAR0001		

TILLER ENGINE PARTS LIST - R210P

#	Part Number	Description	Qty.
71	90408-0600-03	Washer	3
	90001-0608-03	Hexagon Flange Bolt, M6 x 8	3
	90684-Z030210-0000	Clip	1
	S/N: <20DEC3061	/	/
	28200-Z141010-H200	Bolt and gasket assembly	3
	S/N: >21MAR0001	/	/
72	90203-Z010110-0000	Stud, M8 x 34, Black Zinc	2
73	18001-Z440110-00A0	Exhaust Gasket	1
74	18100-Z140410-0002	Muffler Assembly	1
	S/N: <20DEC3061		
	18100-Z140412-0002		
	S/N: >21MAR0001		
75	90303-0800-3101	Hexagon Nut, M8, Blue White Zinc	2
76	90204-Z620110-00A0	Stud, M6 x 115, Black Zinc	2
77	16002-Z010110-0000	Carburetor Insulator Gasket	1
78	16003-Z010110-0000	Carburetor Insulator Plate	1
79	16001-Z010110-0000	Carburetor Gasket	1
80	16100-Z142910-00M1	Carburetor Assembly	1
	S/N: <20DEC3061		
	16100-Z142911-00M1		
	S/N: >21MAR0001		
81	17001-Z010210-0000	Air Cleaner Gasket	1
82	17100-Z012210-00A1	Air Cleaner	1
83	17150-Z2M0110-0000	Air Cleaner Element	1
84	90305-0600-33	Hexagon Flange Nut, M6, Black Zinc	2
85	90007-0630-A1	Hexagon Flange Bolt, M6 x 30, Blue White Zinc	1
	S/N: <20DEC3061		
	90007-0630-A1A0		
	S/N: >21MAR0001		

#	Part Number	Description	Qty.
86	16161-Z151710-0000	Main Jet, Standard	1
	S/N: <20DEC3061		
	16161-Z151710-00A2		
	S/N: >21MAR0001		
	16161-Z151510-0000	Main Jet, Altitude 3000-6000 Feet	1
	S/N: <20DEC3061		
	16161-Z151510-00A4		
	S/N: >21MAR0001		
	16161-Z151310-0000	Main Jet, Altitude 6000-8000 Feet	1
	S/N: <20DEC3061		
	16161-Z151310-00A4		
	S/N: >21MAR0001		
87	16112-Z010310-0000	Seal Ring, Float	1
88	90681-Z010610-0000	Seal Ring	1
89	16620-Z810310-H300	Fuel Tank	1
	S/N: <20DEC3061		
	16620-Z810310-H200		
	S/N: >21MAR0001		
90	16680-Z010210-0000	Fuel Tank Oil Outlet Subassembly	1
91	90740-Z010510-00A1	Clamp	1
92	90686-Z010710-00M1	Fuel Pipe, Ø4.5 x Ø8.5 x 160	1
93	30431-Z010110-0003	Rubber Jacket, Ø9.5 x Ø11 x 90, Black	1
94	90521-Z010110-0000	Key	1
	S/N: <20DEC3061		
	90521-Z010110-00A0		
	S/N: >21MAR0001		
95	90722-Z2R0110-0000	End Plug	1
96	16730-Z440810-LK01	Fuel Tank Cap	1

TILLER ENGINE PARTS LIST - R210P

#	Part Number	Description	Qty.
97	16652-Z010810-0001	Fuel Strainer	1
98	37200-Z810210-0001	Fuel Gauge	1
99	90685-Z030610-01A1	Clamp, Ø8 x 7 x 0.6	1
100	90001-0630-0101	Hexagon Flange Bolt, M6 x 30, Blue White Zinc	1
101	12110-Z810120-0099	Valve Set	1

TILLER ENGINE PARTS DIAGRAM - GB215

100379(1TC7QG016)Part Illustrations

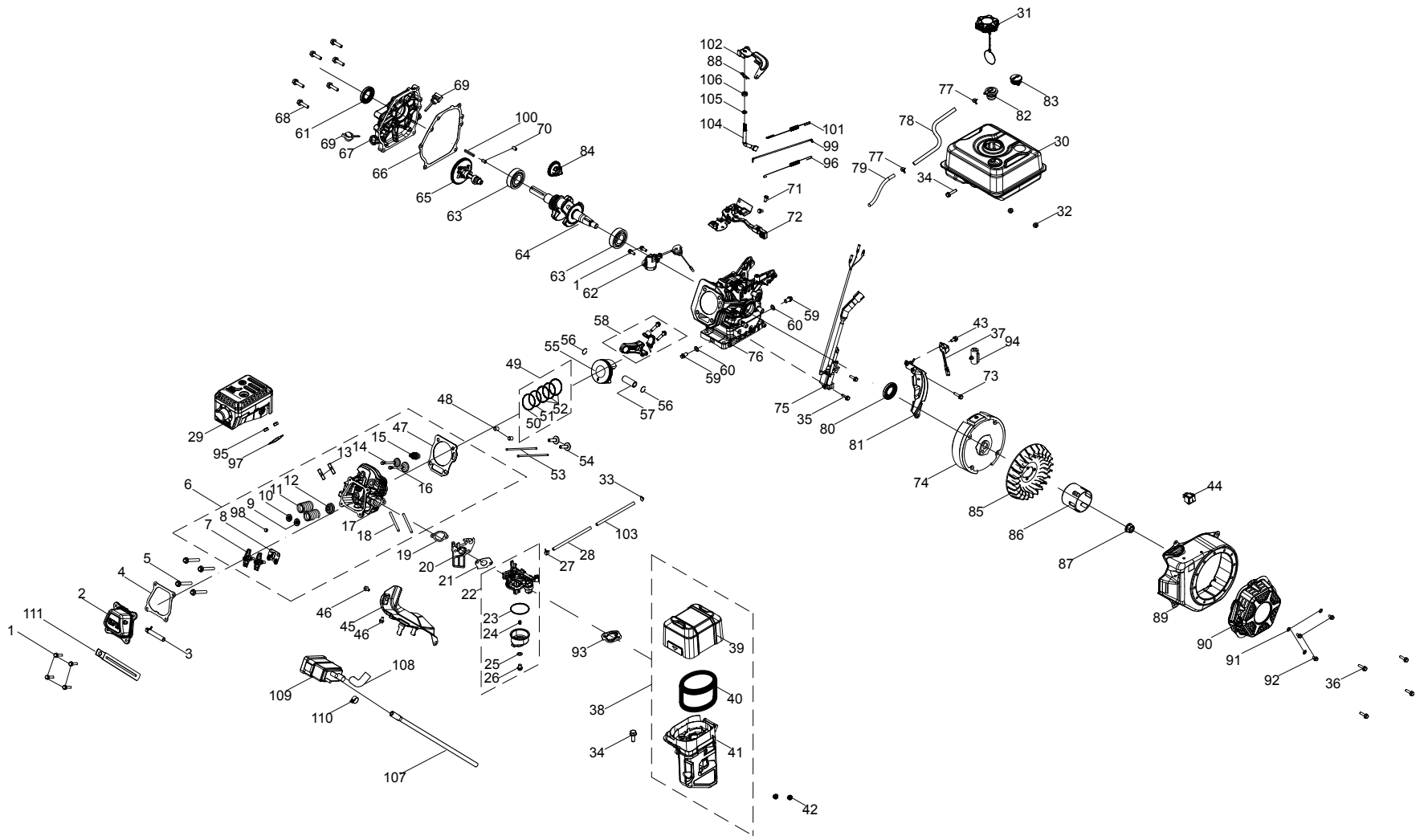

TILLER ENGINE PARTS LIST - GB215

#	Part Number	Description	Qty.
1	100011264-0003	Flange Bolt M6 x 16, GB5789	6
2	100002335	Cylinder Head Cover(Cpe)	1
3	100002832	Breather Tube	1
4	100079562	Gasket, Cylinder Head Cover	1
5	100002463-0001	Flange Bolt M8 x 65	4
6	100746583	Cylinder Head Assembly	1
7	100004420	Rocker Arm	2
8	100050881	Guide Plate, Push Rod	1
9	100004580	Valve Spring Seat, Intake	1
10	100004585	Valve Spring Seat, Exhaust	1
11	100004564	Spring Valve	2
12	100004600	Oil Seal, Intake Valve	1
13	100010387	Stud Bolt M8 x 34	2
14	100057969	Exhaust Valve	1
15	100009378	Spark Plug F6RTC	1
16	100004522	Intake Valve	1
17	100002378	Cylinder Head	1
18	100733507	Stud Bolt M6 x 117	2
19	100078607	Gasket, Insulator	1
20	100005599	Insulator, Carburetor	1
21	100078606	Gasket, Carburetor	1
22	100732679-0001	Carburetor Assembly	1
23	100005717	O-Ring, Fuel Bowl	1
24	100073724	Main Jet Standard (74)	1
	100092470	Main Jet Altitude 1000-3000m (72)	/
25	100006037	Gasket, Fuel Bowl Mounting Bolt	1
26	100005725	Mounting Bolt, Fuel Bowl	1
27	100005149	Clamp Ø7.5	1
28	100063788	Fuel Tube, Ø4 x Ø8 x 157	1
29	100735981	Muffler	1

#	Part Number	Description	Qty.
30	100730667-0002	Fuel Tank Assembly	1
31	100730969	Fuel Tank Cap	1
32	100011452-0003	Flange Nut M6	2
33	100005137	Clamp	1
34	100011269-0003	Flange Bolt M6 x 28	2
35	100011268-0003	Flange Bolt M6 x 25	2
36	100011262-0003	Flange Bolt M6 x 14	4
37	100010040	Oil Sensor	1
38	100732678	Air Cleaner Assembly	1
39	100734201	Air Cleaner Cover	1
40	100746758	Air Cleaner Element	1
41	100734203	Air Cleaner Base	1
42	100011463-0004	Flange Nut M6, GB6177.1	2
43	100011261-0004	Flange Bolt M6 x 12	1
44	100733063-0001	Switch	1
45	100071973	Air Guide, Lower	1
46	100011260-0005	Flange Bolt M6 x 10, GB5789	2
47	100732676	Gasket, Cylinder Head	1
48	100010558	Dowel Pin Ø10 x 16	2
49	100003245	Piston Ring Set	1
50	100003150	1st Piston Ring	1
51	100003191	2nd Piston Ring	1
52	100003283	Oil Ring	1
53	100077152	Push Rod	2
54	100004262	Lifter, Valve	2
55	100086253	Piston	1
56	100003221	Circlip, Wrist Pin	2
57	100003120	Wrist Pin	1
58	100003446	Connecting Rod Assembly	1
59	100010272	Drain Bolt, M10 x 1.25 x 15	2

TILLER ENGINE PARTS LIST - GB215

#	Part Number	Description	Qty.
60	100010459	Washer Ø10 x 1.5 x Ø16	2
61	100017651	Oil Seal Ø25 x Ø41.25 x 6, Spiral Grain	1
62	100010011	Oil Level Sensor	1
63	100010680	Bearing, 6205	2
64	100023653	Crankshaft	1
65	100079561	Camshaft	1
66	100052829	Gasket, Crankcase Cover	1
67	100002975	Cover, Crankcase	1
68	100011319-0001	Flange Bolt M8 x 32	6
69	100004105-0006	Oil Dipstick Assembly	2
70	100010550	Dowel Pin Ø8 x 14	2
71	100011215-0001	Flange Bolt M6 x 12	2
72	100732677-0001	Control Assembly	1
73	100011266-0004	Flange Bolt M6 x 20	1
74	100009503	Flywheel	1
75	100733580	Ignition Module	1
76	100135103	Crankcase	1
77	100005148	Clamp Ø8	2
78	100732680	Fuel Hose 1	1
79	100748283	Sheath, Vent Tube	1
80	100017644	Oil Seal Ø25 x Ø41.25 x 6	1
81	100150079	Lower Guard	1
82	100008968	Reversal Valve	1
83	100730895	Fuel Gauge	1
84	100008296	Gear, Governor	1
85	100007028	Cooling Fan	1
86	100007550	Pulley, Starter	1
87	100011459-0003	Flange Nut M14 x 1.5	1
88	100007986	Cotter, Governor Shaft	1
89	100734204-0001	Fan Cover, Yellow 109 C	1
90	100156547-0001	Recoil Starter	1
91	100010894-0002	Washer Ø6	3

#	Part Number	Description	Qty.
92	100011528-0002	Flange Bolt M6 x 10	3
93	100005629	Gasket, Air Cleaner Base	1
94	100000657	Clip	1
95	100011422-0004	Flange Nut M8, GB6170	2
96	100053141	Spring, Throttle Return	1
97	100006526	Gasket, Muffler	1
98	100004588	Retainer, Valve	1
99	100007947	Rod, Governor	1
100	100010630	Key, 4.75 x 4.75 x 42	1
101	100735999	Spring, Governor	1
102	100039298	Arm, Governor	1
103	100009151	Fuel Hose Jacket 2	1
104	100007975	Governor Shaft	1
105	100010113	Sealing Ring, Ø5.2 x 1.9	1
106	100017630	Oil Seal Ø6 x Ø11 x 4	1
107	100732681	Fuel Hose, 215mm	1
108	100081431	Fuel Hose	1
109	100008951	Carbon Canister	1
110	100062810	Clamp Ø9.5 x 8	1
111	100000655	Wire Clip B	1