CHAMPION
GLOBAL POWER EQUIPMENT™-MC

Champion Power Equipment, Inc., Santa Fe Springs, CA USA

MODEL #201182

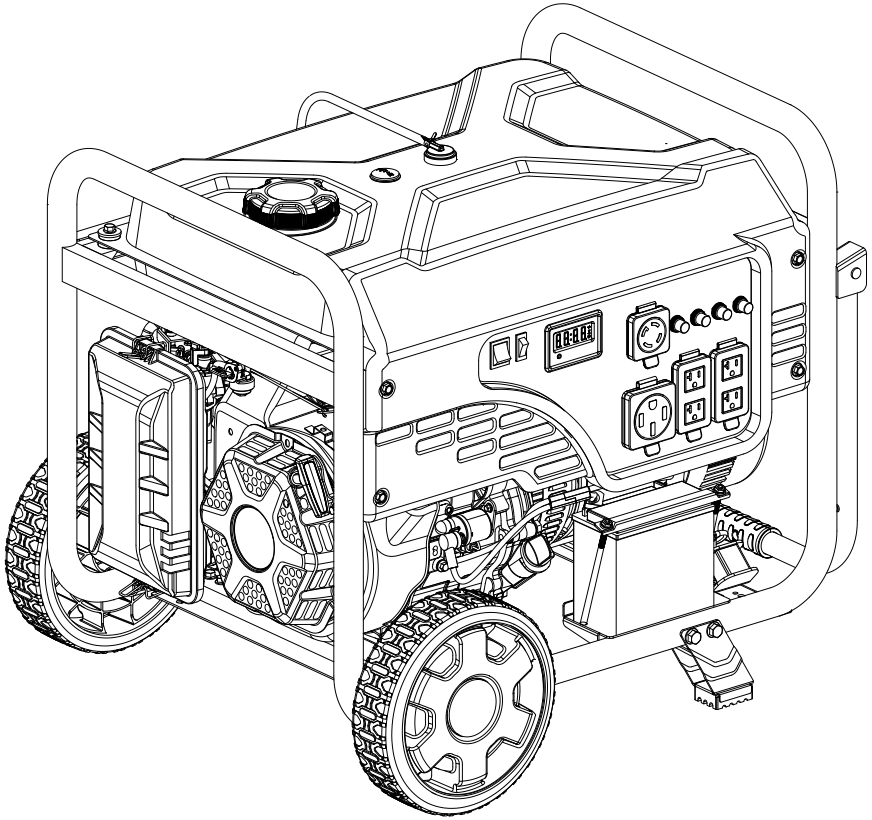

PARTS INFORMATION

7500W WIRELESS REMOTE START GENERATOR

SERIAL NUMBER RANGE: ALL

To order replacement parts please visit:
shop.championpowerequipment.com
or call **1-877-338-0999.**

REV 20220310

TABLE OF CONTENTS

Generator Parts Diagram 3
Generator Parts List 4
Engine Parts Diagram 5
Engine Parts Part List 6
Cylinder Head Diagram 8
Cylinder Head Part List 9
Carburetor Part Diagram 10
Carburetor Part List 11
Alternator Part Diagram 12
Alternator Part List 13
Fuel Tank Part Diagram 14
Fuel Tank Part List 15
Control Panel Part Diagram 16
Control Panel Part List 17
Frame Part Diagram 18
Frame Part List 19
Wiring Diagram 20

GENERATOR PARTS DIAGRAM

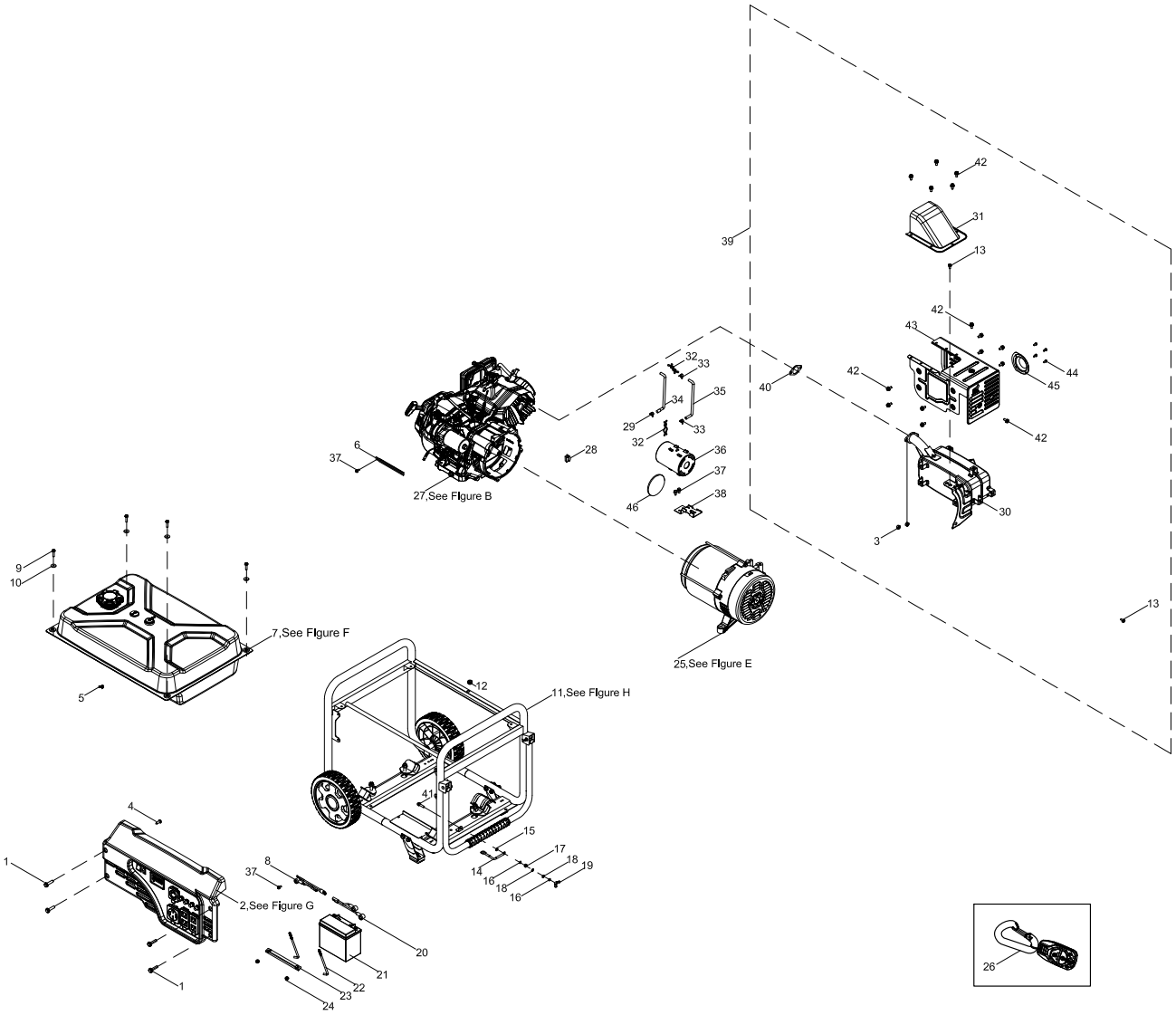

Figure A

GENERATOR PARTS LIST

#	Part Number	Description	Qty.
1	100011530-0002	Flange Bolt M6 x 16	4
2	100750783	Panel Assembly, See Figure G	1
3	100011422-0004	Flange Nut M8	2
4	100032967-0002	Self-tapping Screw ST4.2 x 16	1
5	100005149	Calmp 1, Ø7.5	1
6	100062546	Clip B	1
7	100750785	Fuel Tank Assembly, See Figure F	1
8	100752662	Wire Harness, SAE Engine	1
9	100011268-0003	Flange Bolt M6 x 25	4
10	100010439-0002	Washer Ø6.5 x 2 x Ø25	4
11	100750782	Frame Assembly, See Figure H	1
12	100009075	Rubber Damper	1
13	100011311-0005	Flange Bolt M8 x 16	2
14	100746237	Grounding Wire	1
15	100011025-0001	Lock Washer Ø6, Toothed	1
16	100010886-0004	Spring Washer Ø6	2
17	100011421-0003	Flange Nut M6	1
18	100010920-0002	Flat Washer Ø6	2
19	100010828-0002	Butterfly Type Nut M6	1
20	100752661	Wire Harness, SAE Battery	1
21	100021409	Battery, 12V 14Ah	1
22	100021362-0003	J-Bolt, Battery Retaining	2
23	100021372-0017	Bracket, Battery Retaining	1
24	100011452-0003	Lock Nut M6, Flange	2
25	100750784	Alternator Assembly, See Figure E	1
26	100729547	Remote Key Fob	1
27	1ZC7DC016	Engine, 439cc, See Figure B	1
28	100018704	Rubber Plug	1
29	100005130	Clamp Ø9 x 8	1
30	100714555	Muffler	1

#	Part Number	Description	Qty.
31	100163910-0001	Air Guide, Muffler	1
32	100000658	Clamp	2
33	100005148	Clamp , Ø8	2
34	100712242	Vent Tube, 200mm	1
35	100087746	Vent Tube, 830mm	1
36	100008945	Carbon Canister, 650cc	1
37	100011261-0004	Flange Bolt M6 x 12, GB5789	4
38	100008675-0001	Bracket, Carbon Canister Mounting	1
39	100751096	Muffler Assembly	1
40	100735662	Gasket, Exhaust Pipe	1
41	100011269-0003	Flange Bolt M6 x 28	1
42	100097575-0001	Flange Bolt M6 x 10	15
43	100714387	Heat Shield, Muffler	1
44	100147110-0002	Self-tapping Screw ST4 x 8	4
45	100714398	Spark Arrester	1
46	100716369	Insulator, Carbon Canister	1

ENGINE PARTS DIAGRAM

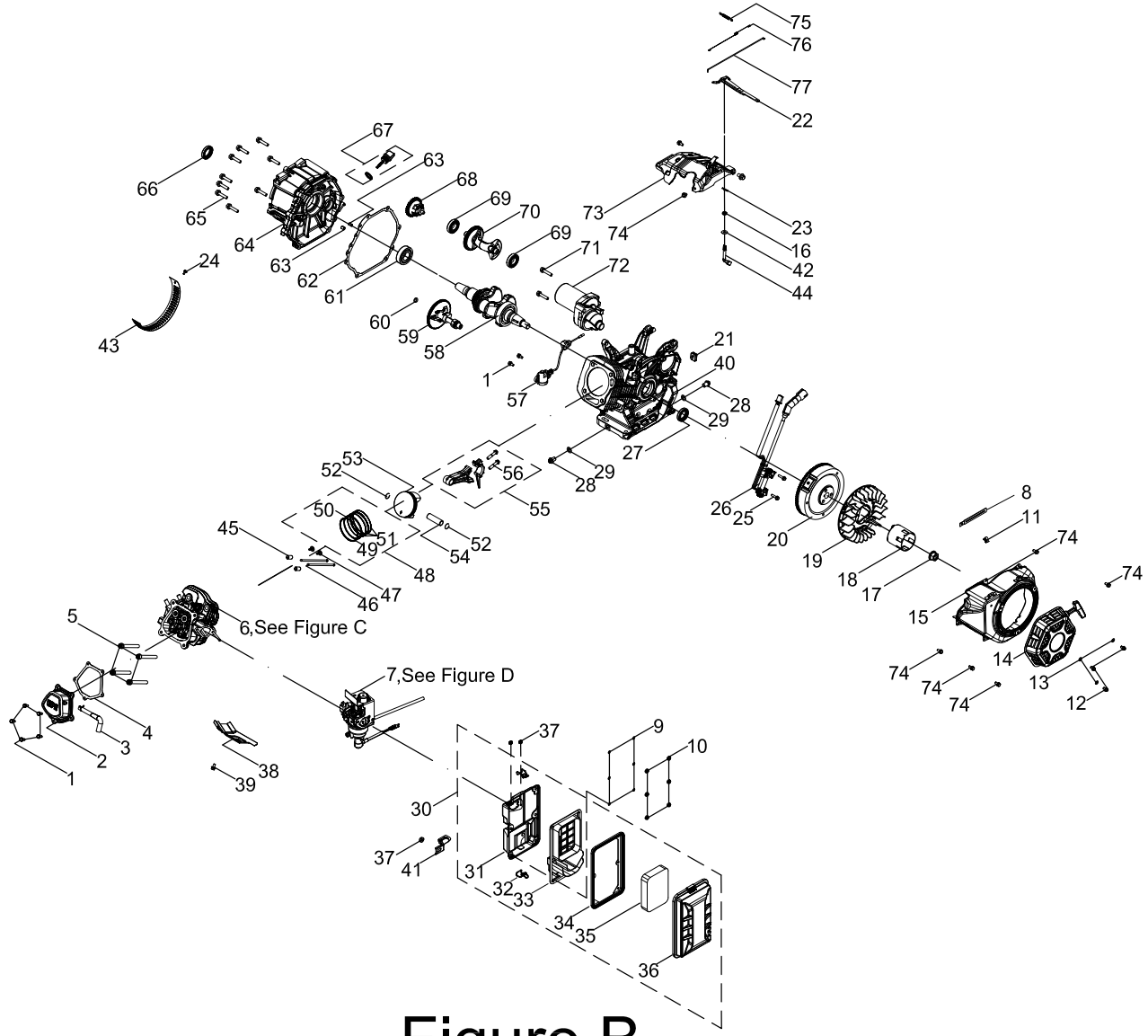

Figure B

ENGINE PARTS PART LIST

#	Part Number	Description	Qty.
1	100011264-0003	Flange Bolt M6 x 16, GB5789	7
2	100002337	Cylinder Head Cover	1
3	100715570	Breather Tube	1
4	100055922	Gasket, Cylinder Head Cover	1
5	100002470	Flange Bolt M10 x 1.25 x 87	4
6	100750202	Cylinder Head Assembly- See Figure C	1
7	100753992	Carburetor Assembly- See Figure D	1
8	100000655	Wire Clip B	1
9	100010430	Washer Ø6 x 1 x Ø12	6
10	100011451-0003	Flange Nut M5	6
11	100000667	Clamp Ø8 × 8	1
12	100011565-0002	Flange Bolt M6 x 10, GB16674.1	3
13	100010920-0001	Washer Ø6	3
14	100715836-0001	Recoil Starter, Black	1
15	100716802-0001	Fan Cover, Yellow	1
16	100017631	Oil Seal Ø8 x Ø14 x 4	1
17	100011460-0001	Flange Nut M16 x 1.5	1
18	100007562	Pulley, Starter	1
19	100007043	Fan, Engine Cooling	1
20	100009568	Flywheel	1
21	100000676	Rubber Block	1
22	100008428	Arm, Governor	1
23	100007989	Cotter, Governor Shaft	1
24	100011248-0003	Flange Bolt M5 x 10	1
25	100011269-0003	Bolt M6 x 28	2
26	100750819	Ignition Module	1
27	100017649	Oil Seal Ø35 x Ø52 x 7	1
28	100010275	Drain Bolt, M12 x 1.5 x 15	2
29	100010467	Washer Ø12 x 1.5 x Ø15	2
30	100712978	Air Filter Assembly	1

#	Part Number	Description	Qty.
31	100714346	Air Filter Base	1
32	100714345	Air Filter Clip	2
33	100714344	Air Filter Separator	1
34	100714343	Gasket, Air Filter Cover	1
35	100713882	Air Filter Element	1
36	100714350	Air Filter Cover	1
37	100011452-0003	Lock Nut M6, Flange	3
38	100007097	Air Guide, Lower	1
39	100011260-0005	Flange Bolt M6 x 10	1
40	100712190-0001	Crankcase	1
41	100021032	Bracket, Air Cleaner Support	1
42	100010518-0001	Washer Ø8 x0.8 x Ø20	1
43	100141250	Air Defector	1
44	100007980	Governor Shaft	1
45	100010562	Dowel Pin Ø12 x 20	2
46	100149152	Push Rod	2
47	100149154	Lifter, Valve	2
48	100003265	Piston Ring Set	1
49	100003168	1st Piston Ring	1
50	100003210	2nd Piston Ring	1
51	100003295	Oil Ring	1
52	100003225	Circlip, Wrist Pin	2
53	100030224	Piston	1
54	100003132	Wrist Pin	1
55	100080992	Connecting Rod Assembly	1
56	100003432	Bolt, Connecting Rod	2
57	100094024	Oil Level Sensor	1
58	100712186	Crankshaft	1
59	100711980	Camshaft	1
60	100010521-0001	Washer Ø16.2 x 0.3 x Ø24	1

ENGINE PARTS PART LIST

#	Part Number	Description	Qty.
61	100010789	Bearing TM6207E - P64	1
62	100714134	Gasket, Crankcase Cover	1
63	100010549	Dowel Pin Ø8 x 12	2
64	100712041	Cover, Crankcase	1
65	100011323-0001	Flange Bolt M8 x 38	9
66	100017653	Oil Seal Ø35 x Ø52 x 7, Spiral Grain	1
67	100004129-0008	Oil Dipstick Assembly	1
68	100008305	Gear, Governor	1
69	100010742	Bearing TM6202 - P63	2
70	100713987	Balance Shaft	1
71	100011320-0002	Flange Bolt M8 x 35	2
72	100752622	Starter	1
73	100715161	Air Guide, Engine Fan	1
74	100011261-0004	Flange Bolt M6 x 12, GB5789	8
75	100717724	Spring, Governor	1
76	100007927	Spring, Throttle Return	1
77	100007958	Rod, Governor	1

CYLINDER HEAD DIAGRAM

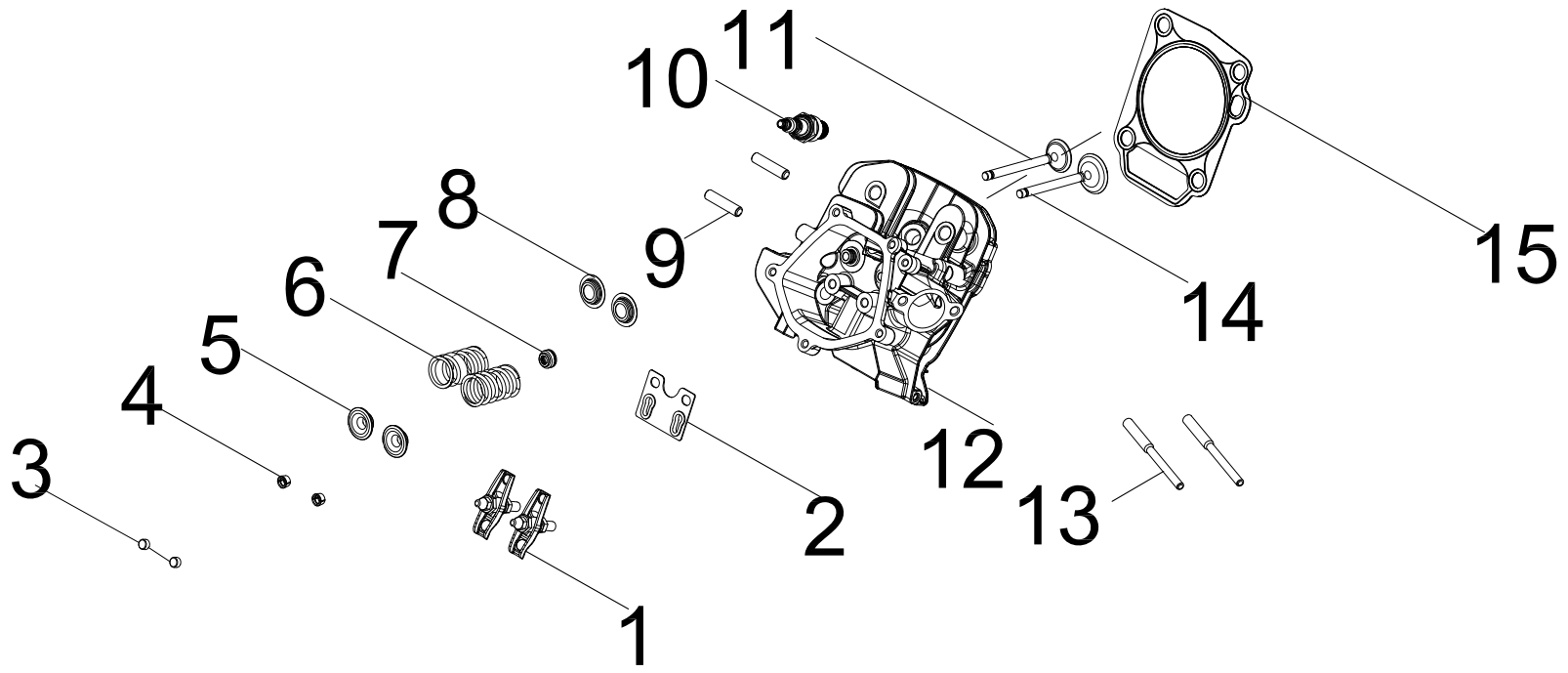

Figure C

CYLINDER HEAD PART LIST

#	Part Number	Description	Qty.
1	100149155	Rocker Arm Assembly	2
2	100004474	Guide Plate, Push Rod	1
3	100004589	Retainer, Valve	2
4	100004576	Valve Collet	4
5	100004516	Valve Spring Seat, Upper	2
6	100067633	Spring, Valve	2
7	100004602	Oil Seal, Intake Valve	1
8	100004575	Valve Spring Seat, Lower	2
9	100010389	Stud Bolt M8 x 35	2
10	100009378	Spark Plug F6RTC	1
11	100004559	Exhaust Valve	1
12	100715291	Cylinder Head	1
13	100010373-0001	Stud Bolt M6-8 x 110	2
14	100711964	Intake Valve	1
15	100150209	Gasket, Cylinder Head	1

CARBURETOR PART DIAGRAM

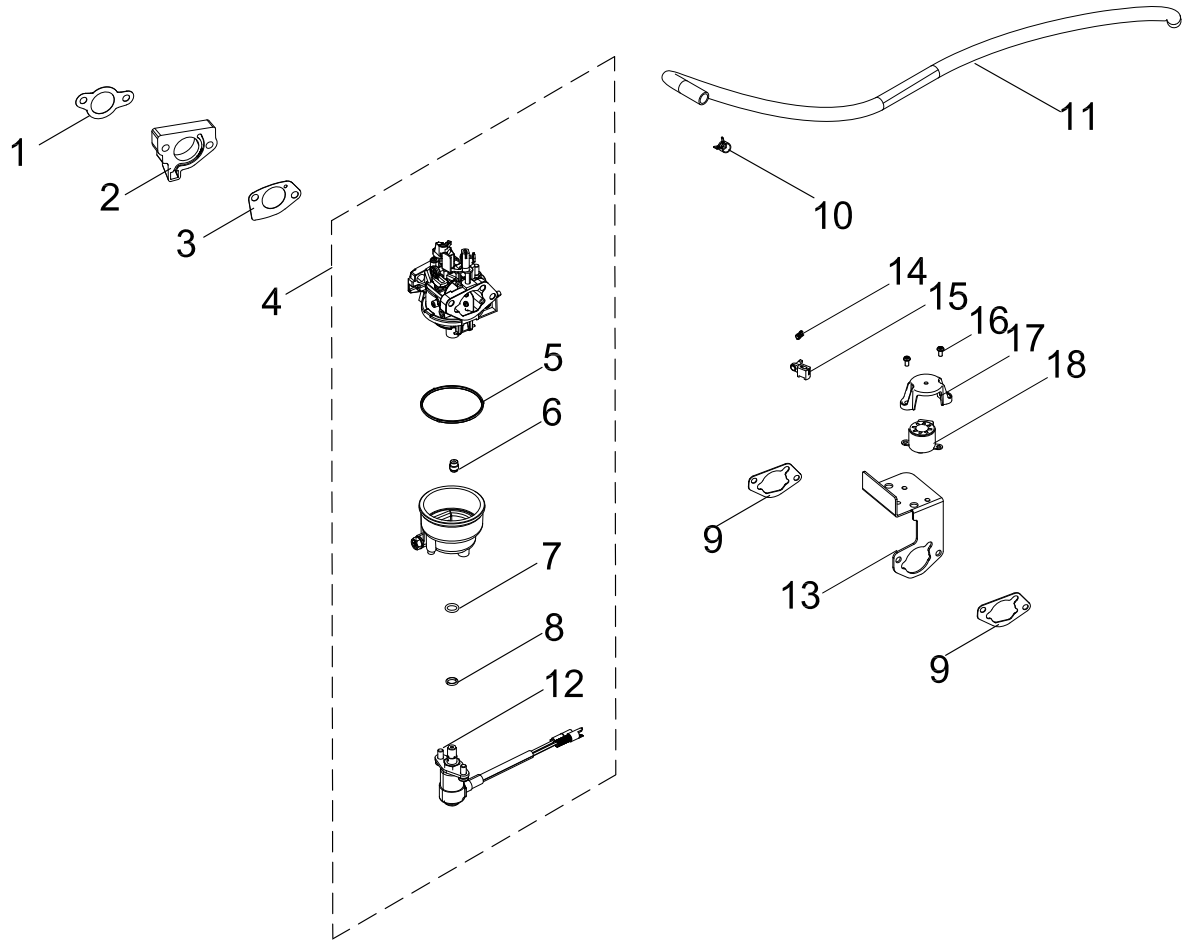

Figure D

CARBURETOR PART LIST

#	Part Number	Description	Qty.
1	100076230	Gasket, Insulator	1
2	100005618	Insulator, Carburetor	1
3	100076228	Gasket, Carburetor	1
4	100747332	Carburetor	1
5	100005720	Fuel Bowl O-Ring	1
6	100756890	Main Jet Standard (118)	1
	100756891	Main Jet Altitude 1000-3000m (116)	/
7	100130186	O-Ring, Solenoid Valve Base	1
8	100130185	O-Ring, Solenoid Valve	1
9	100076229	Gasket, Air Filter Base	2
10	100005149	Clamp Ø7.5	1
11	100735843	Fuel Tube, Ø4 x Ø8 x 175	1
12	100718072	Solenoid Valve	1
13	100009820	Bracket, Stepper Motor Mounting	1
14	100052405	Spring	1
15	100041167	Clamp, Stepping Motor Guide	1
16	100060638-0002	Screw M4 x 8	2
17	100060473	Cover, Stepper Motor	1
18	100753435	Stepping Motor	1

ALTERNATOR PART DIAGRAM

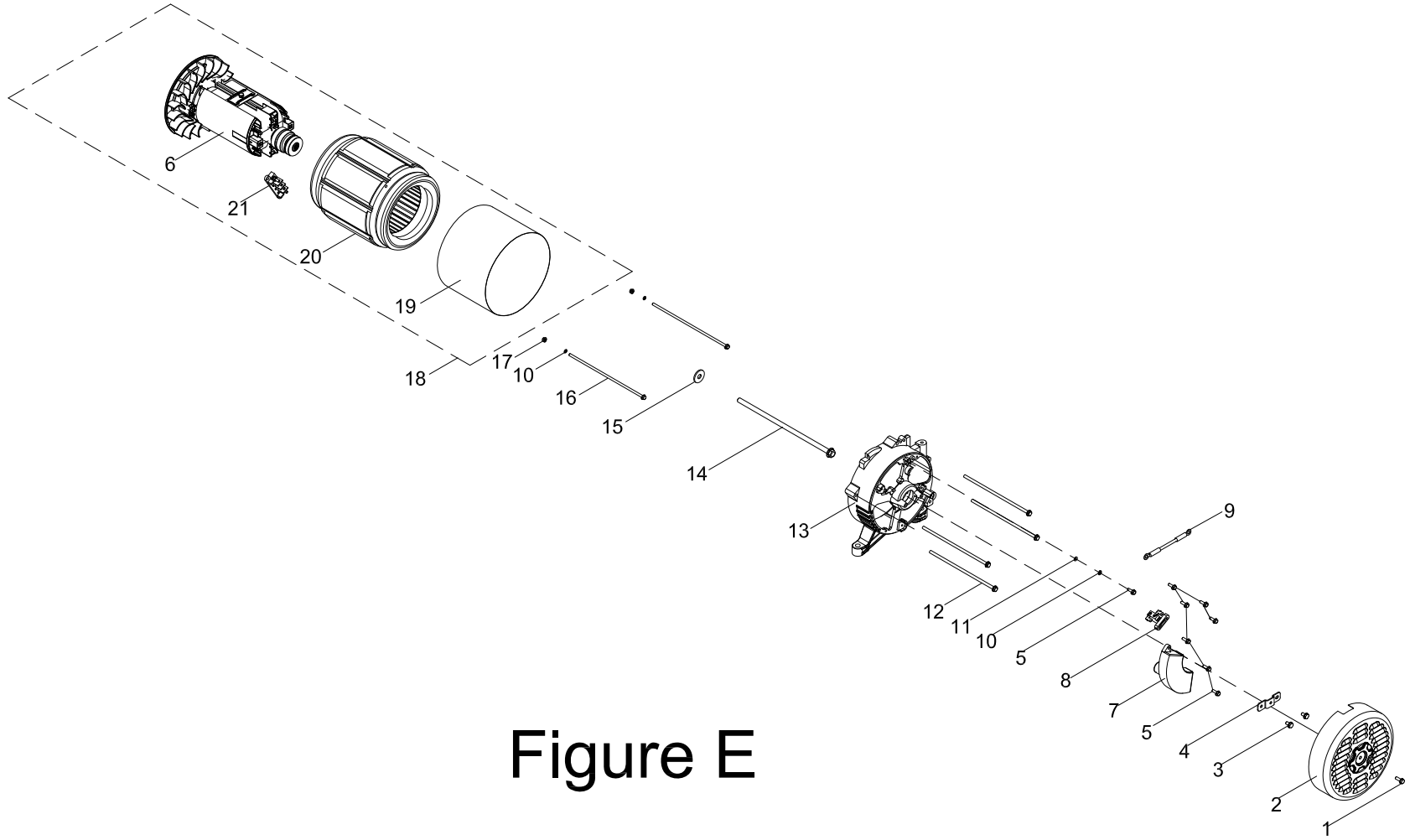

Figure E

ALTERNATOR PART LIST

#	Part Number	Description	Qty.
1	100011570-0001	Big Flange Bolt M6 x 12	1
2	100018662-0001	Cover, End Housing, Yellow	1
3	100011250-0002	Flange Bolt M5 x 14	2
4	100020167	Bracket, End Cover Housing	1
5	100011252-0001	Flange Bolt M5 x 18	8
6	100750246	Rotor Assembly, Al, Ø119 x 155 mm	1
7	100750029	AVR	1
8	100018595	Carbon Brush Assembly	1
9	100746230	Grounding Wire	1
10	100010885-0004	Spring Washer Ø5	3
11	100010919-0002	Flat Washer Ø5	1
12	100011304-0002	Flange Bolt M6 x 194	4
13	100018572	End Housing	1
14	100033045-0001	Flange Bolt M10 x 1.25 x 280	1
15	100010905-0001	Washer Ø10	1
16	100031927-0001	Flange Bolt M5 x 225	2
17	100011419-0001	Flange Nut M5	2
18	100746771	Alternator Assembly, Al, Ø204 x 155 mm	1
19	100750244	Stator Cover, 147.5mm	1
20	100750245	Stator Assembly, Al, Ø204 x 155 mm	1
21	100018701	Terminal Block	1

FUEL TANK PART DIAGRAM

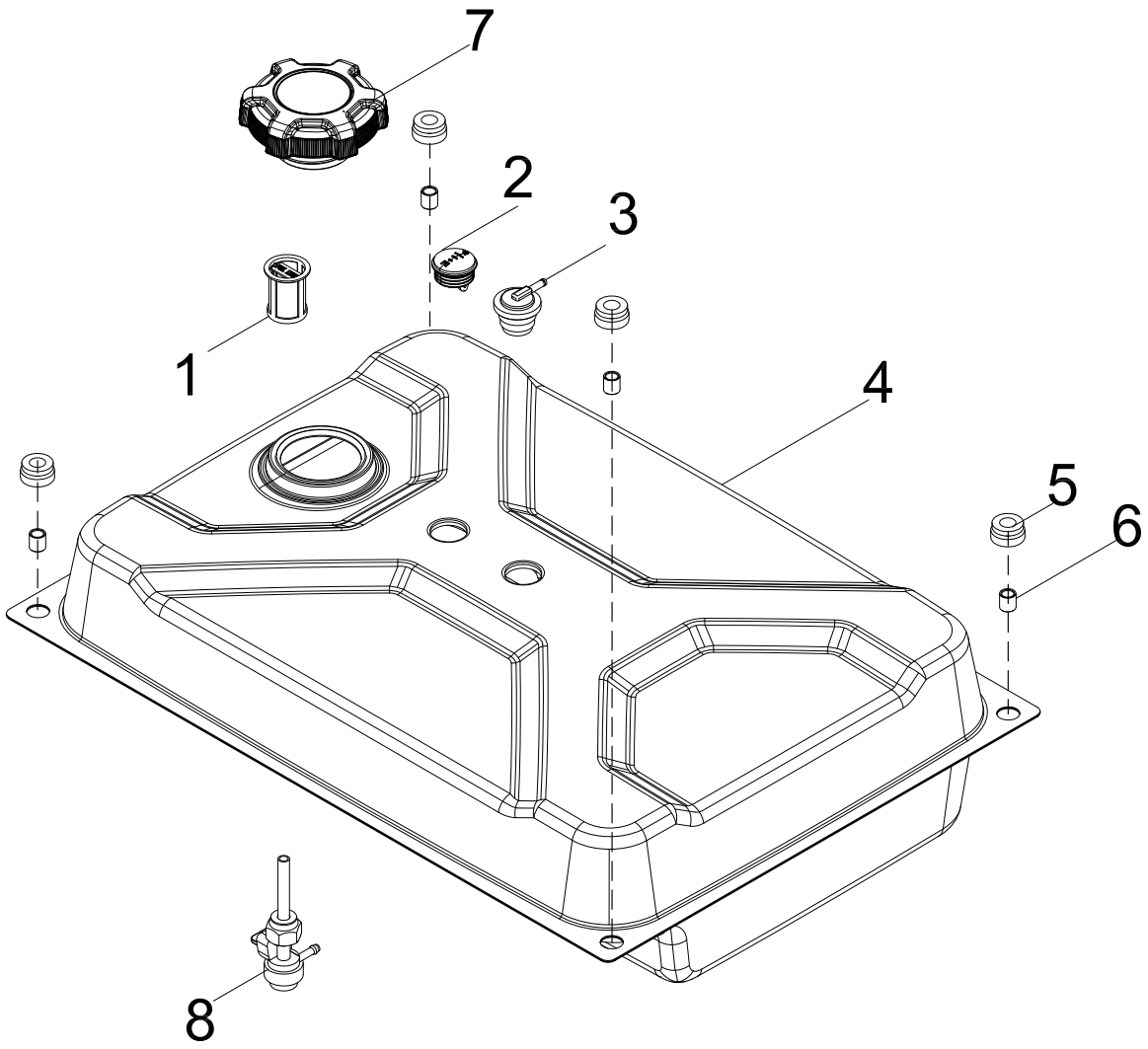

Figure F

FUEL TANK PART LIST

#	Part Number	Description	Qty.
1	100714493	Fuel Filter Assembly	1
2	100718432	Fuel Gauge	1
3	100008968	Reversal Valve	1
4	100145529-0001	Fuel Tank	1
5	100032369	Vibration Mounting, Fuel Tank	4
6	100021118	Bushing, Ø12 x Ø9 x 13	4
7	100142004	Fuel Tank Cap	1
8	100732004	Fuel Valve	1

CONTROL PANEL PART DIAGRAM

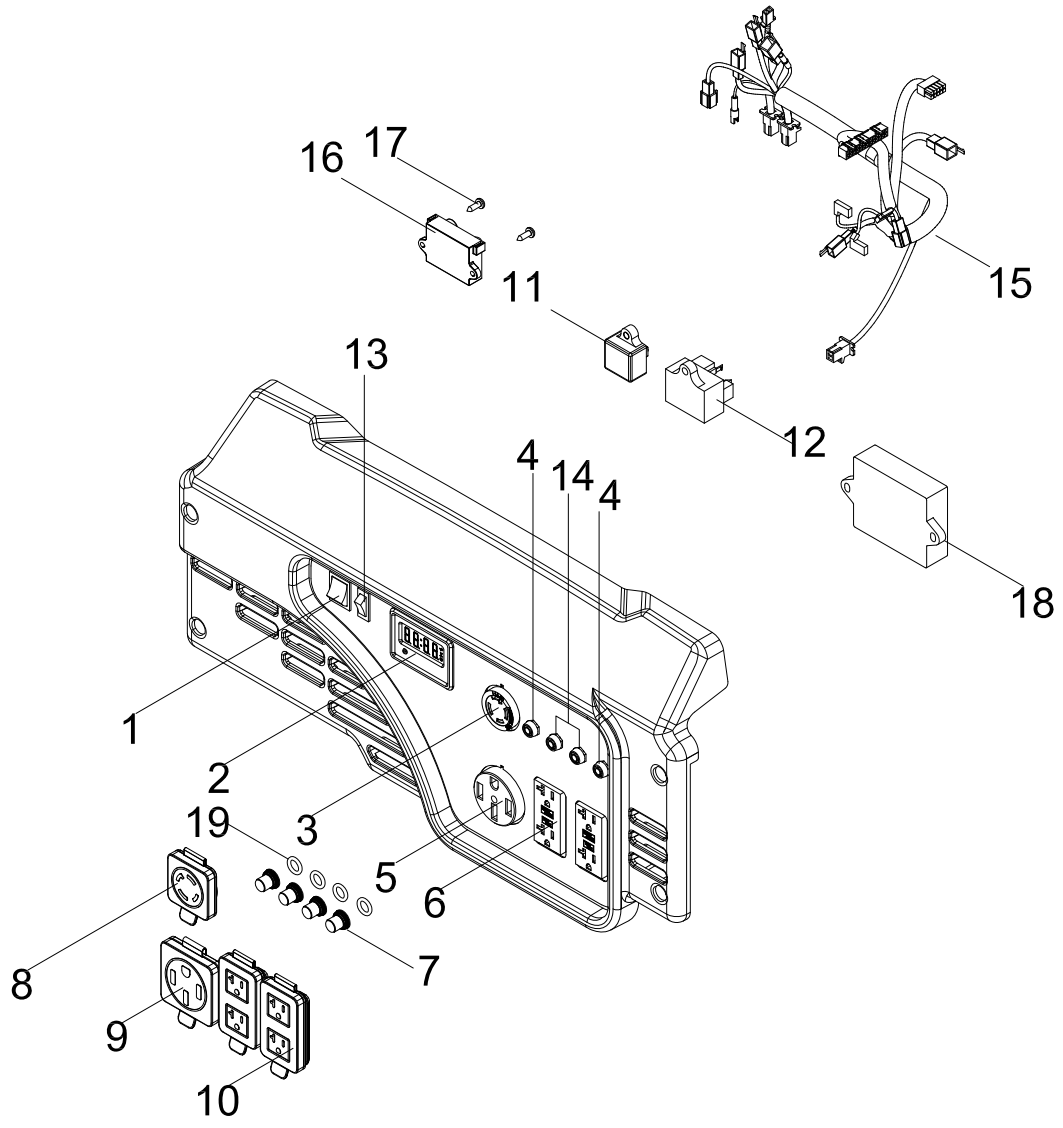

Figure G

CONTROL PANEL PART LIST

#	Part Number	Description	Qty.
1	100019771-0001	Switch, Engine	1
2	100727009	Intelligauge, INT1OF	1
3	100020021	Receptacle L14-30R	1
4	100019751	30Amp Circuit Breaker, Push Button	2
5	100020022	Receptacle 14-50R	1
6	100052461-0001	Receptacle GFCI 5-20R, Duplex	2
7	100120180	Breaker Cover	4
8	100731571	Receptacle Cover L14-30R	1
9	100731570	Receptacle Cover 14-50R	1
10	100731574	Receptacle Cover GFCI 5-20R, Duplex	2
11	100750165	Charger Module	1
12	100728386	Overvoltage Protector Module	1
13	100096134	Switch, Battery	1
14	100019754	20Amp Circuit Breaker, Push Button	2
15	100750247	Wire Harness Assembly	1
16	5.1830.022	CO Shutdown Module	1
17	100032967-0002	Self-tapping Screw ST4.2 x 16	2
18	100750031	Remote Control Module	1
19	100031552	O-Ring	4

FRAME PART DIAGRAM

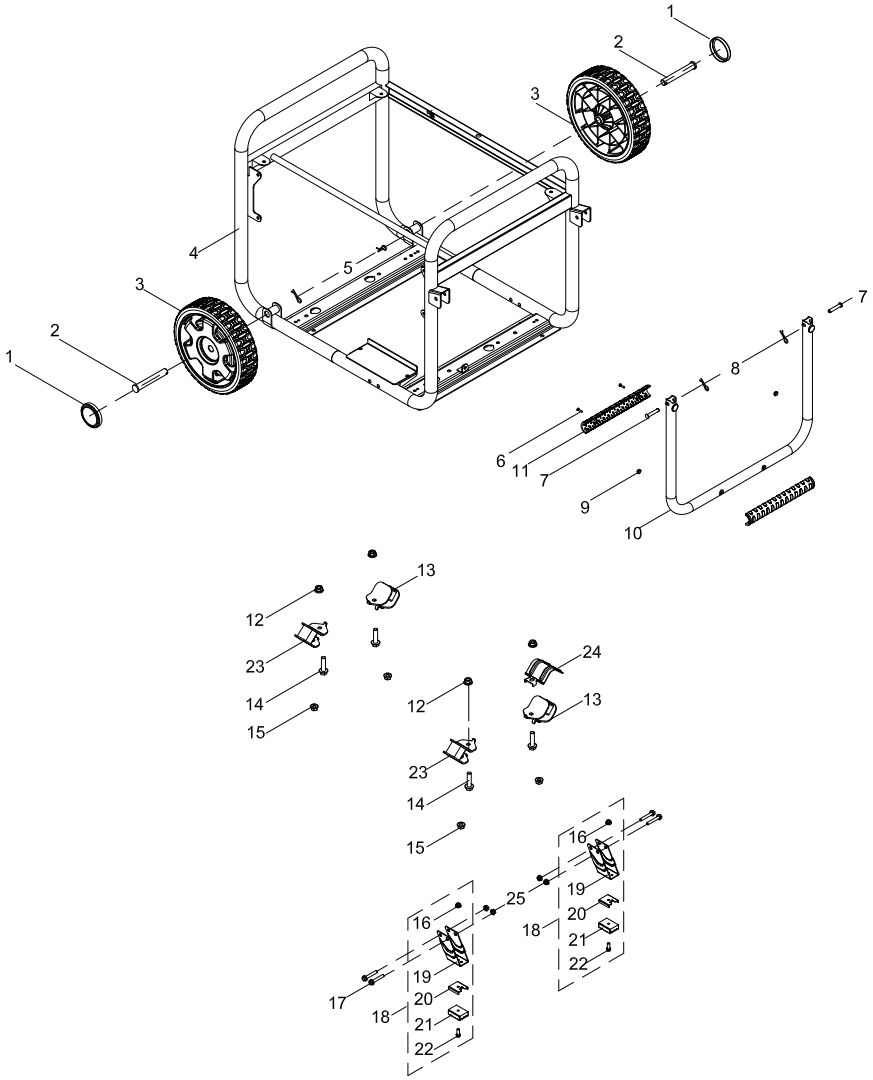

Figure H

FRAME PART LIST

#	Part Number	Description	Qty.
1	100712243-0001	Cover, Wheel, Yellow	2
2	100011064-0001	Roll Pin Ø16 x 100	2
3	100163346-0001	9.5 In. Wheel, Yellow	2
4	100749304-0001	Frame	1
5	100023414-0002	R-pin	2
6	100095857-0005	Flange Bolt M4 x 18	2
7	100011047-0003	Roll Pin Ø8 x 40	2
8	100714685-0001	R-pin, R5	2
9	100078853	Damping Pad, Handle	2
10	100725488-0001	Handle	1
11	100711157	Grip, Handle	1
12	100011456-0003	Flange Nut M10 x 1.25	4
13	100068992	Vibration Mount 1	2
14	100011381-0002	Flange Bolt M10 x 1.25 x 40	4
15	100011453-0003	Lock Nut M8, Flange	4
16	100011452-0003	Lock Nut M6, Flange	2
17	100011330-0001	Flange Bolt M8 x 48	4
18	100163347-0001	Support Leg Assembly, 104 mm	2
19	100711874-0001	Support Leg	2
20	100068623-0001	Stop Block	2
21	100058956	Vibration Mount	2
22	100011266-0004	Flange Bolt M6 x 20	2
23	100031984	Vibration Mount 2	2
24	100021029	Heat Shield	1
25	100011453-0002	Flange Nut M8, GB6177.1	4

WIRING DIAGRAM

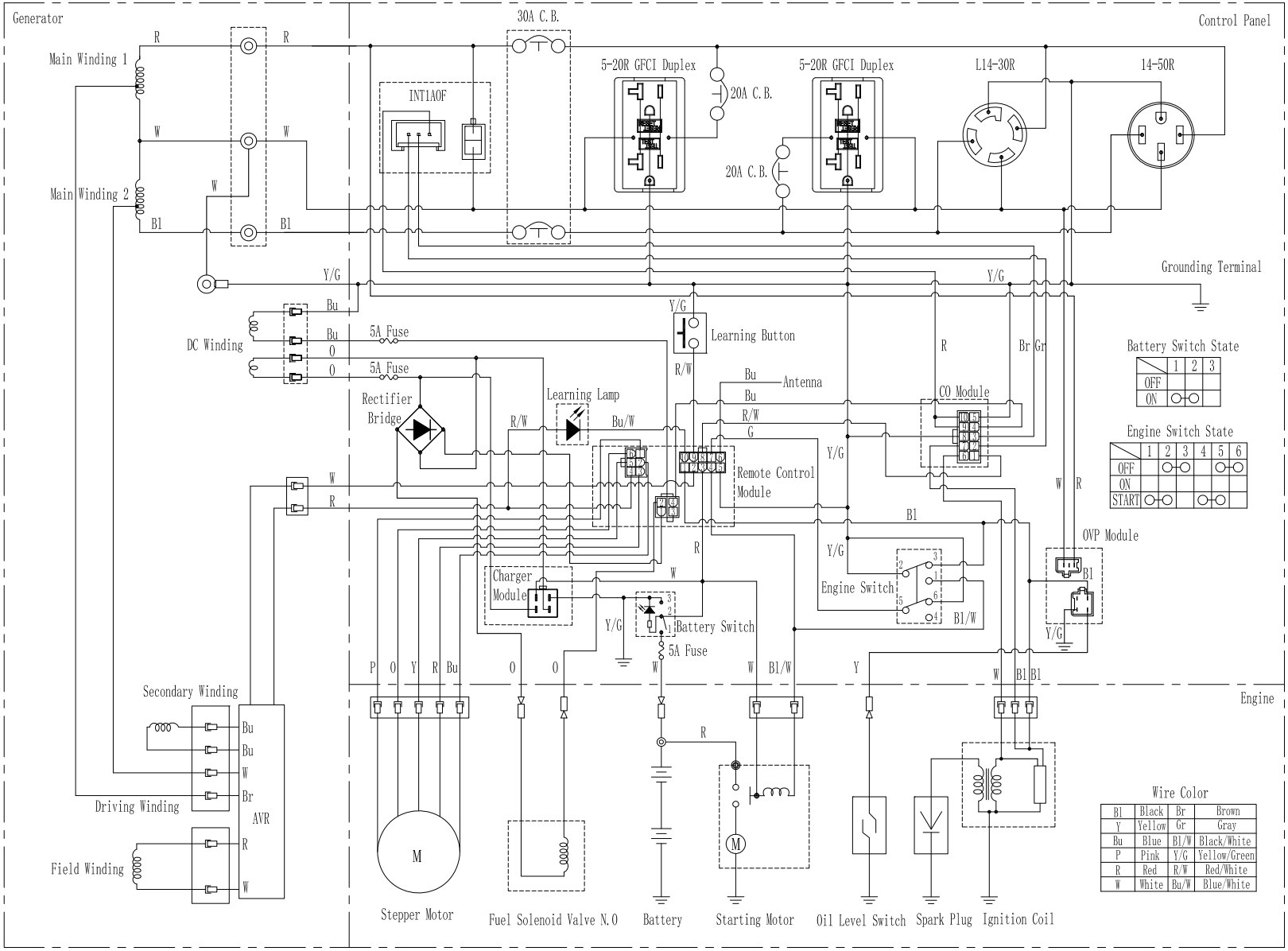

Bl	Black	Br	Brown
Y	Yellow	Gr	Gray
Bu	Blue	Bl/W	Black/White
P	Pink	Y/G	Yellow/Green
R	Red	R/W	Red/White
W	White	Bu/W	Blue/White