CHAMPION
GLOBAL POWER EQUIPMENT™-MC

Champion Power Equipment, Inc., Santa Fe Springs, CA USA

MODEL #201185

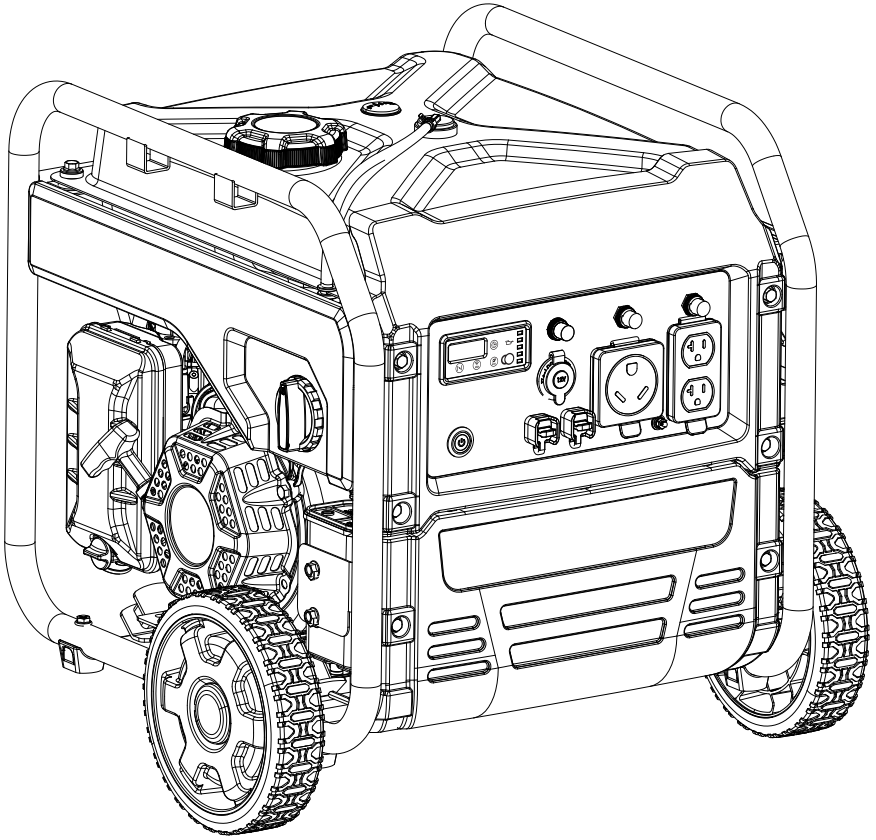

PARTS INFORMATION

4250W WIRELESS REMOTE START OPEN FRAME INVERTER

SERIAL NUMBER RANGE: ALL

To order replacement parts please visit:
shop.championpowerequipment.com
or call **1-877-338-0999.**

REV 20220330

TABLE OF CONTENTS

Inverter Generator Diagram 3
Inverter Generator Parts List 4
Engine Parts Diagram 5
Engine Parts List 6
Cylinder Head Diagram 8
Cylinder Head Parts List 9
Carburetor Diagram 10
Carburetor Parts List 11
Fuel Tank Diagram 12
Fuel Tank Parts List 13
Control Panel Diagram 14
Control Panel Parts List 15
Wheel Kit Diagram 16
Wheel Kit Parts List 17
Wiring Diagram 18

INVERTER GENERATOR DIAGRAM

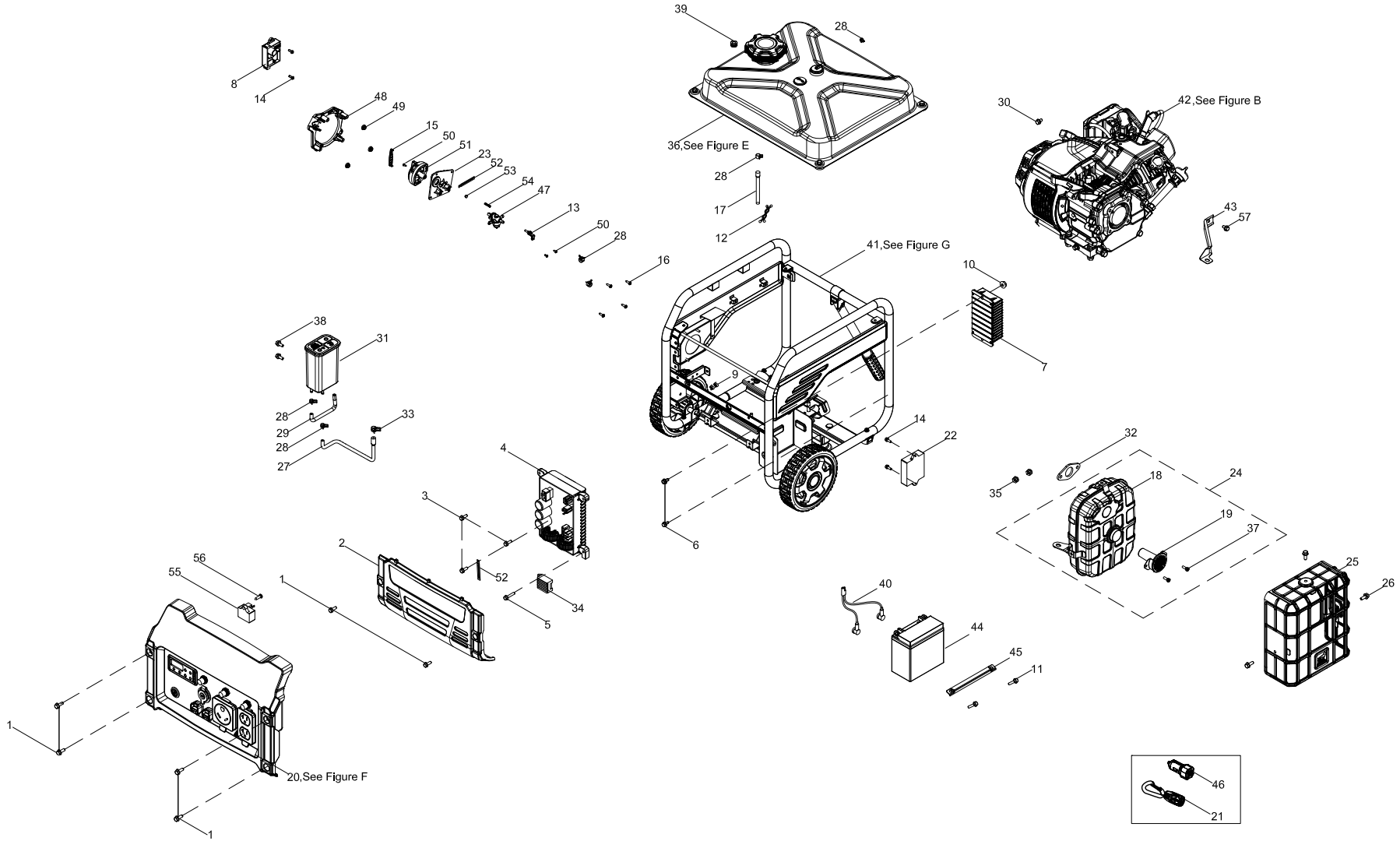

Figure A

INVERTER GENERATOR PARTS LIST

#	Part Number	Description	Qty.
1	100011264-0002	Flange Bolt M6 x 16	6
2	100142007-0003	Protective Cover, Inverter Module	1
3	100011268-0003	Flange Bolt M6 x 25, GB5789	3
4	100152470	Inverter Module, 120V 60Hz	1
5	100011270-0002	Flange Bolt M6 x 30	1
6	100011263-0002	Flange Bolt M6 x 15	2
7	100750830	E-start Module	1
8	5.1830.022	CO Shutdown Module	1
9	100000672	Clip	2
10	100011452-0003	Flange Nut M6, GB6177.1	1
11	100011269-0003	Flange Bolt M6 x 28	2
12	100000658	Clamp	1
13	100725113	Fuel Switch Stopper	1
14	100099002-0001	Screw ST5 x 14	4
15	100712234	Fuel Switch Cover	1
16	100032963-0003	Self-tapping Screw ST3.5 x 13	4
17	100754063	Fuel Tube	1
18	100151976	Muffler	1
19	100154368	Spark Arrester Assembly	1
20	100750810-0001	Panel Assembly, See Figure F	1
21	100729547	Remote Control	1
22	100729981	Start/Stop Control Module	1
23	100725109	Mounting Seat, Fuel Switch	1
24	100151975	Muffler Subassembly	1
25	100142015-0001	Muffler Cover	1
26	100097575-0002	Flange Bolt M6 x 10, QC340	3
27	100715702	Vent Tube, Long	1
28	100005148	Clamp Ø8	6
29	100715703	Vent Tube, Short	1
30	100011260-0005	Flange Bolt M6 x 10, GB5789	1

#	Part Number	Description	Qty.
31	100157588	Carbon Canister, 320 cc	1
32	100058175	Gasket, Muffler,Graphite	1
33	100090871	Clamp Ø9.7 x 8	1
34	100748227	Rectifier Bridge, Capacitance	1
35	100011422-0004	Flange Nut M8, GB6170	2
36	100756916	Fuel Tank Assembly, See Figure E	1
37	100718327	Mounting Bolt, Spark Arrester	2
38	100011260-0003	Flange Bolt M6 x 10	2
39	100009075	Sheath, Vent Tube	1
40	100750829	Battery Connecting Wire	1
41	100755600	Frame Assembly - See Figure G	1
42	1ZC7DC013	Engine, 224 cc, See Figure B	1
43	100158476	Holder, Air Cleaner	1
44	100122390-0002	Battery, 12V 7Ah	1
45	100021372-0005	Pressing Plate, Battery	1
46	100155005-0002	12VDC USB Adapter	1
47	100725107	Fuel Switch	1
48	100754834	Transfer Switch Seat	1
49	100011451-0006	Flange Nut M5, GB6177.1	3
50	100031845-0002	Screw ST4 x 12	3
51	100725108	Fuel Switch Lever	1
52	100000655	Wire Clip B	2
53	100725112	Slide Block, Fuel Switch	1
54	100725111	Fuel Switch Spring	1
55	100124562-0001	Charger Module	1
56	100032967-0002	Self-tapping Screw ST4.2 x 16	1
57	100011570-0001	Flange Bolt M6 x 12	1

ENGINE PARTS DIAGRAM

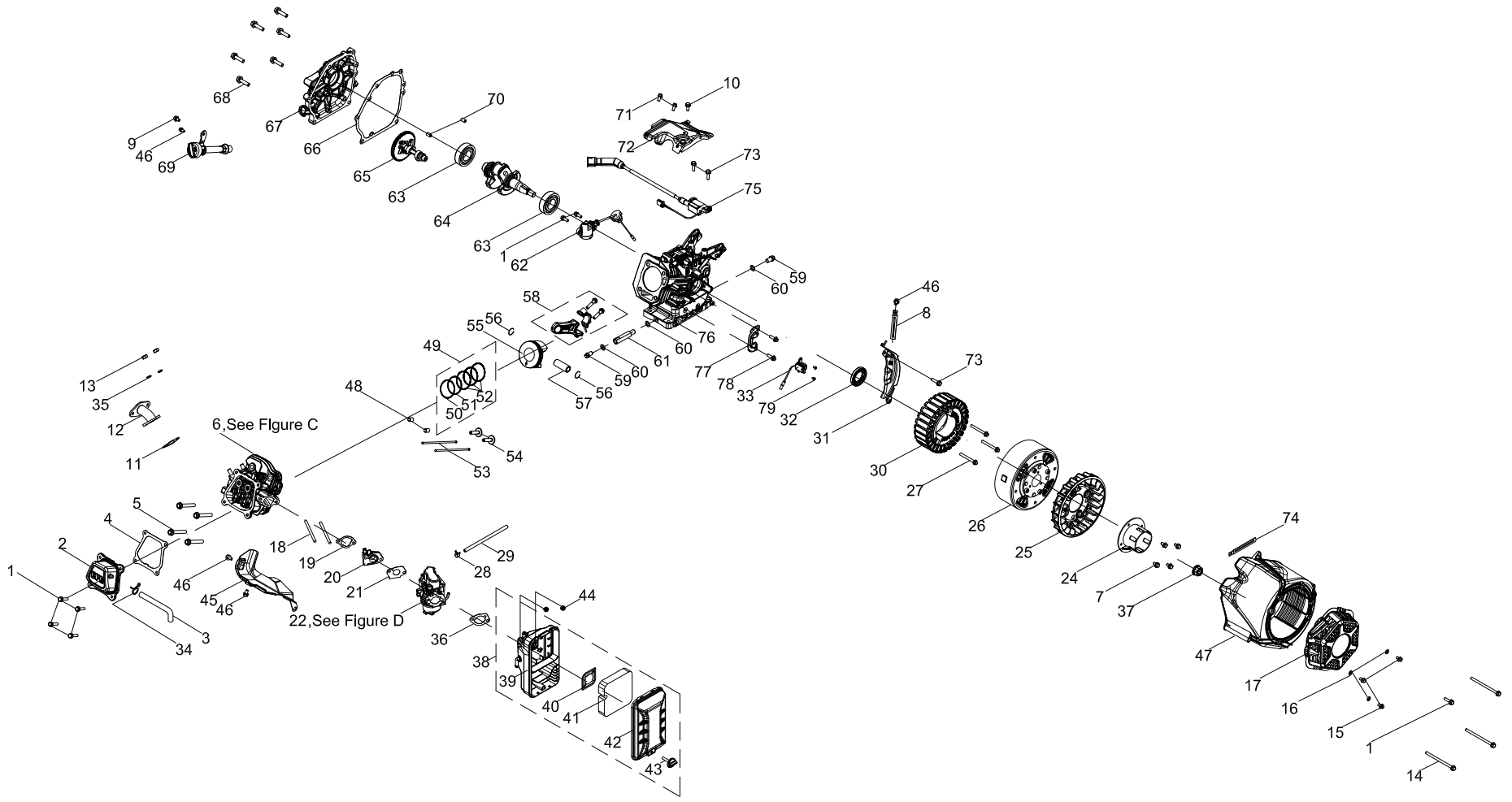

Figure B

ENGINE PARTS LIST

#	Part Number	Description	Qty.
1	100011264-0003	Flange Bolt M6 x 16, GB5789	7
2	100002335	Cylinder Head Cover(Cpe)	1
3	100713739	Breather Tube	1
4	100066138	Gasket, Cylinder Head Cover	1
5	100002464-0001	Flange Bolt M8 x 60	4
6	100159588	Cylinder Head Assembly, See Figure C	1
7	100011581-0001	Flange Bolt M6 x 14	4
8	100062546	Wire Clip B 1	1
9	100011263-0002	Flange Bolt M6 x 15	1
10	100055588-0006	Flange Bolt M6 x 20, GB16674	1
11	100006526	Gasket, Muffler	1
12	100142016	Exhaust Pipe	1
13	100011422-0004	Flange Nut M8, GB6170	2
14	100011284-0003	Flange Bolt M6 x 100	3
15	100011565-0001	Flange Bolt M6 x 10, GB16674.1	3
16	100010894-0001	Washer Ø6	3
17	100156547-0001	Recoil Starter	1
18	100061091	Stud Bolt M6 x 98	2
19	100078607	Gasket, Insulator	1
20	100122101	Insulator, Carburetor	1
21	100078606	Gasket, Carburetor	1
22	100754811	Carburetor Assembly, See Figure D	1
23	100051029-0004	Screw M4 x 6	2
24	100087581	Pulley, Starter	1
25	100087582	Fan, Engine Cooling	1
26	100126953	Rotor Assembly, Permanent Magneto, Ø180 x 64 mm	1
27	100011540-0007	Flange Bolt M6 x 50	3
28	100005149	Clamp	1
29	100754839	Fuel Pipe	1

#	Part Number	Description	Qty.
30	100751058	Stator Assembly	1
31	100130948	Lower Guard	1
32	100017644	Oil Seal Ø25 x Ø41.25 x 6	1
33	100752621	Trigger	1
34	100005152	Clamp Ø11.5	1
35	100010887-0004	Spring Washer Ø8	2
36	100005629	Gasket 2, Carburetor	1
37	100011459-0003	Flange Nut M14 x 1.5	1
38	100717011	Air Cleaner Assembly	1
39	100717013	Air Cleaner Base	1
40	100005078	Air Cleaner Baffle	1
41	100004771	Air Cleaner Element	1
42	100717012	Air Cleaner Cover	1
43	100004949	Air Cleaner Bolt	1
44	100011463-0002	Flange Nut M6	2
45	100007083	Air Guide, Lower	1
46	100011260-0005	Flange Bolt M6 x 10	4
47	100128650-0001	Fan Cover	1
48	100010558	Dowel Pin Ø10 x 16	2
49	100003243	Piston Ring Set	1
50	100072134	1st Piston Ring	1
51	100072135	2nd Piston Ring	1
52	100072136	Oil Ring	1
53	100149269	Push Rod	2
54	100149234	Lifter, Valve	2
55	100003086	Piston	1
56	100003221	Circlip, Wrist Pin	2
57	100003123	Wrist Pin	1
58	100003446	Connecting Rod	1
59	100010272	Drain Bolt, M10 x 1.25 x 15	2

ENGINE PARTS LIST

#	Part Number	Description	Qty.
60	100010459	Washer Ø10 x 1.5 x Ø16	3
61	100002910-0001	Oil Drain Pipe	1
62	100163603	Oil Level Sensor	1
63	100010761	Bearing, TM6205	2
64	100126476	Crankshaft	1
65	100099599	Camshaft	1
66	100010148	Gasket, Crankcase Cover	1
67	100128008	Cover, Crankcase	1
68	100011319-0001	Flange Bolt M8 x 32	6
69	100152738-0001	Oil Dipstick Assembly	1
70	100010550	Dowel Pin Ø8 x 14	2
71	100011215-0001	Flange Bolt M6 x 12	2
72	100122168	Control Assembly	1
73	100011266-0004	Flange Bolt M6 x 20	3
74	100000655	Wire Clip B	1
75	100752629	Ignition Coil	1
76	100149610	Crankcase	1
77	100122099	Bracket, Trigger	1
78	100055591-0007	Flange Bolt M6 x 12, GB16674	2

CYLINDER HEAD DIAGRAM

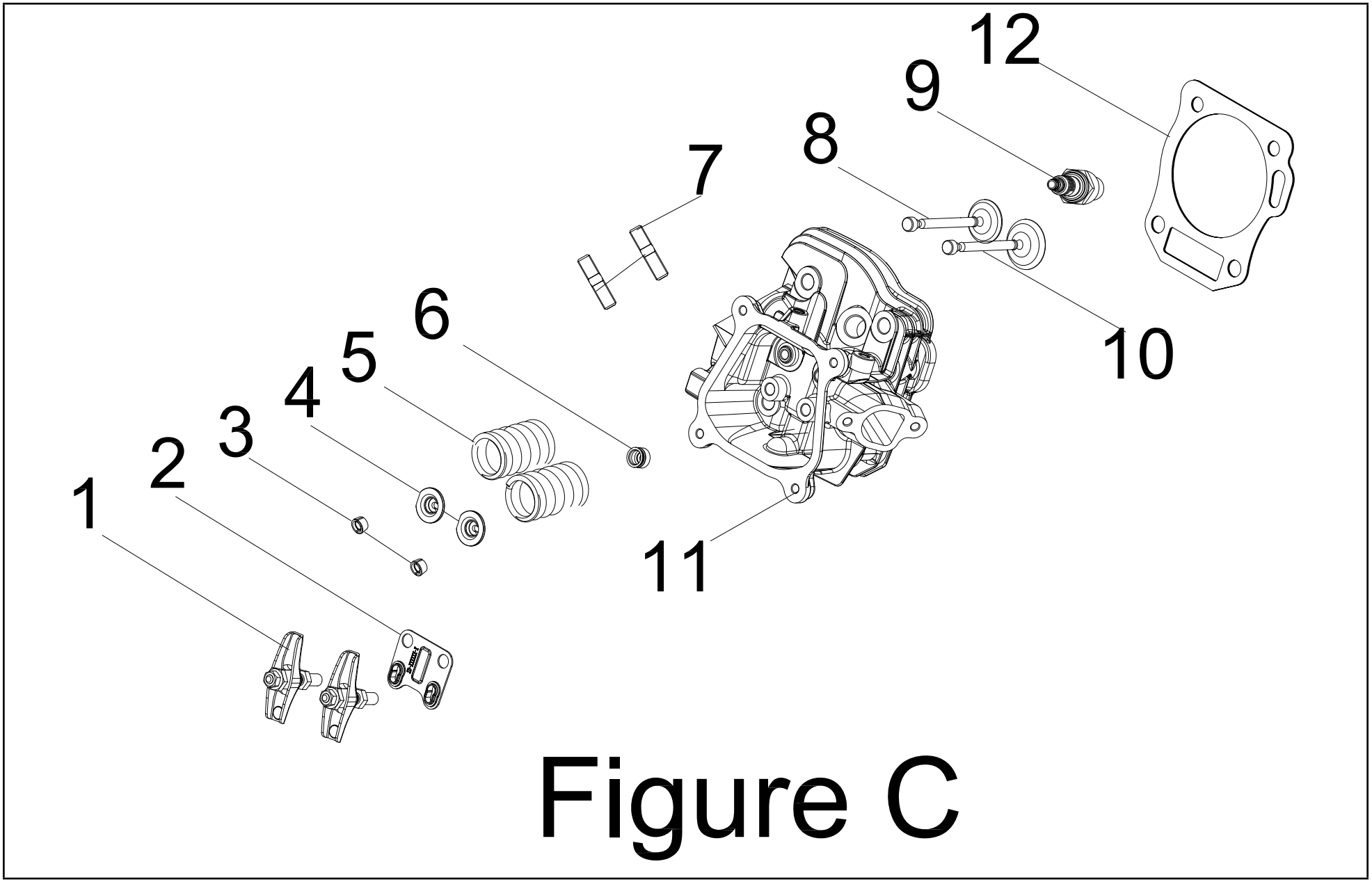

Figure C

CYLINDER HEAD PARTS LIST

#	Part Number	Description	Qty.
1	100149239	Rocker Arm Assembly	2
2	100050881	Guide Plate, Push Rod	1
3	100050896	Valve Collet	4
4	100073758	Valve Spring Seat, Upper	2
5	100713979	Spring, Valve	2
6	100004599	Oil Seal, Intake Valve	1
7	100010387	Stud Bolt M8 x 34	2
8	100713981	Exhaust Valve	1
9	100009378	Spark Plug F6RTC	1
10	100713980	Intake Valve	1
11	100079792	Cylinder Head	1
12	100155656	Gasket, Cylinder Head	1

CARBURETOR DIAGRAM

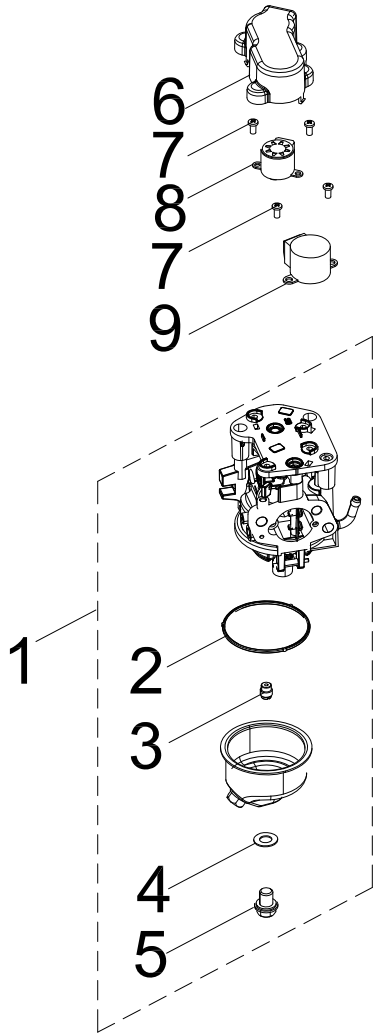

Figure D

CARBURETOR PARTS LIST

#	Part Number	Description	Qty.
1	100714112-0001	Carburetor Assembly	1
2	100005717	Fuel Bowl O-Ring	1
3	100005766	Main Jet Standard (68)	1
	100056226	Main Jet Altitude 1000-3000m (67)	/
	100030033	Main Jet Altitude 2000-3000m (65)	/
4	100030033	Fuel Bowl Mounting Bolt Gasket	1
5	100006037	Fuel Bowl Mounting Bolt	1
6	100005725	Protection Cover, Stepping Motor	1
7	100031809-0002	Screw M3 x 6	4
8	100093486	Stepping Motor	1
9	100720885	Stepping Motor 1	1

FUEL TANK DIAGRAM

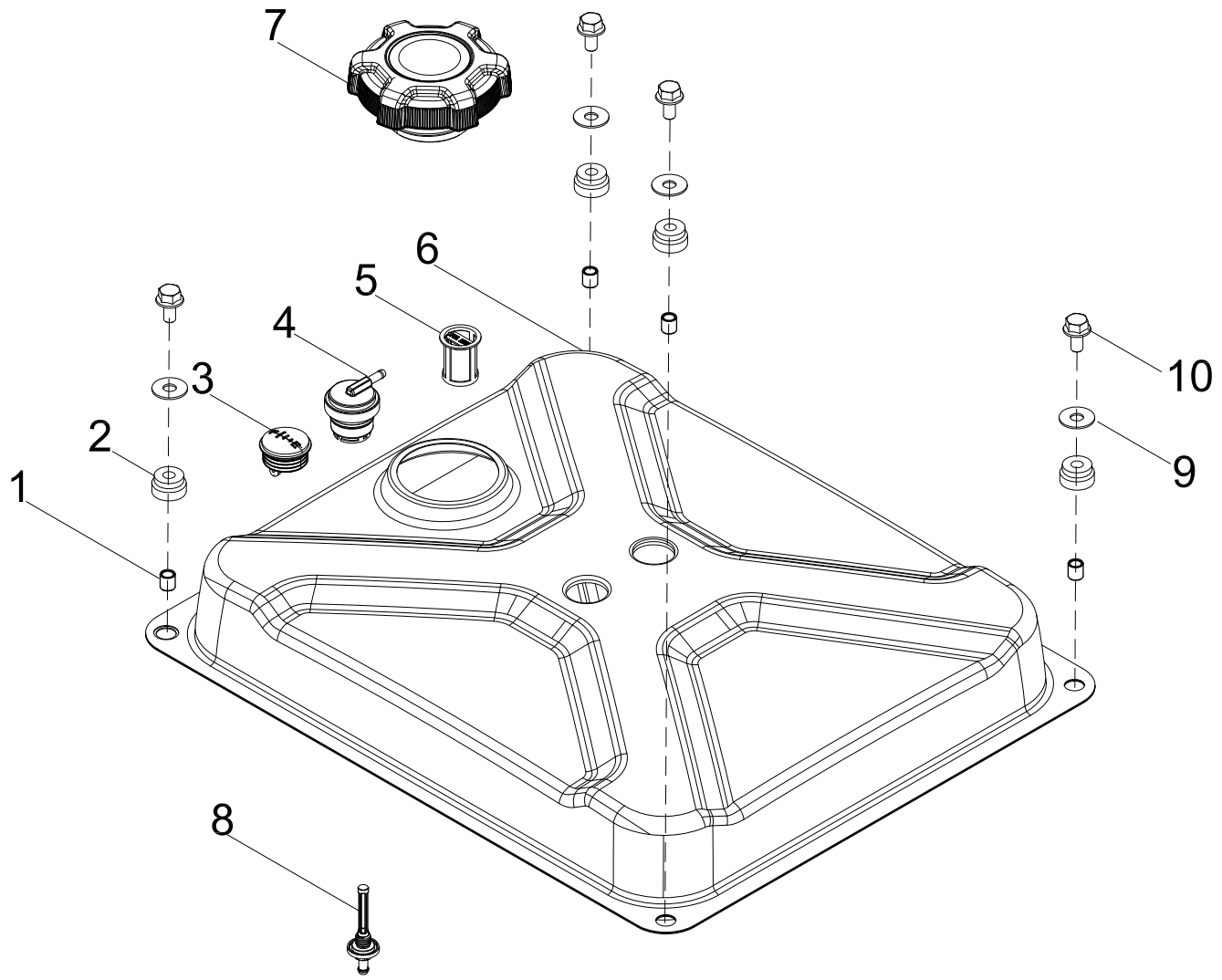

Figure E

FUEL TANK PARTS LIST

#	Part Number	Description	Qty.
1	100715500	Bushing, Ø9 x Ø6.6 x 10	4
2	100711813	Vibration Mounting, Fuel Tank	4
3	100153185	Fuel Gauge	1
4	100099571	Reversal Valve	1
5	100098838	Fuel Filter Assembly	1
6	100756918-0001	Fuel Tank	1
7	100142004	Fuel Tank Cap	1
8	100714546	Fitting, Fuel Tank	1
9	100010437-0001	Washer Ø6.5 x 1.5 x Ø18.2	4
10	100011267-0002	Flange Bolt M6 x 22	4

CONTROL PANEL DIAGRAM

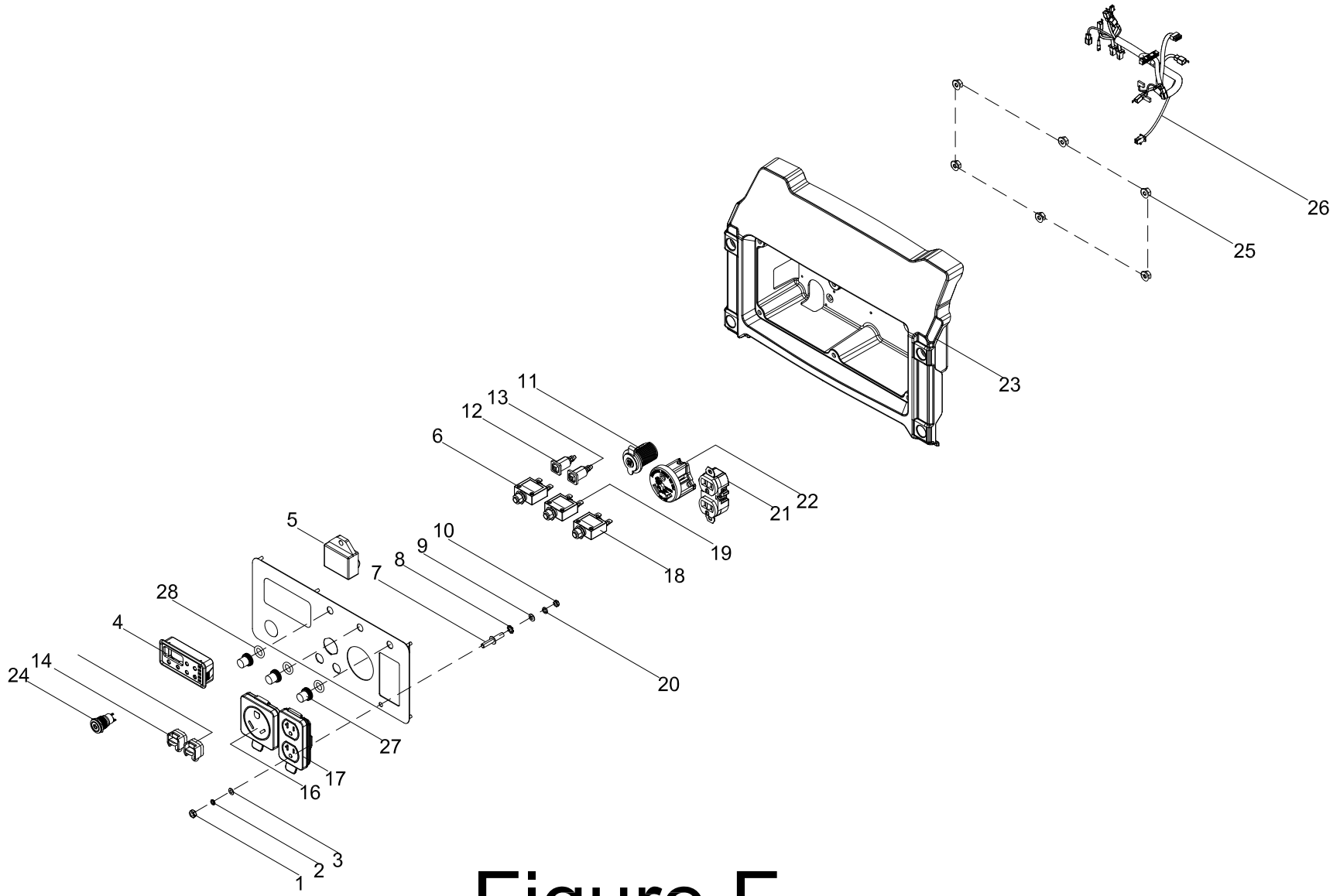

Figure F

CONTROL PANEL PARTS LIST

#	Part Number	Description	Qty.
1	100011421-0002	Flange Nut M6, GB6170	1
2	100010886-0002	Spring Washer Ø6	1
3	100010910-0002	Washer Ø6	1
4	100731289-0001	Intelligauge, INT5DINV	1
5	100750675	Ignition Module	1
6	10057719	8Amp Circuit Breaker, Push Button	1
7	100092320-0002	Grounding Stud	1
8	100011025-0001	Lock Washer Ø6, Toothed	1
9	100010919-0001	Washer Ø5	1
10	100011419-0003	Flange Nut M5	1
11	100019782	Receptacle, 12 VDC	1
12	100746006-0001	Parallel Outlet Socket, Red	1
13	100746006-0002	Parallel Outlet Socket, Black	1
14	100735685-0001	Cover, Parallel Outlet Socket, Red	1
15	100735685-0002	Cover, Parallel Outlet Socket, Black	1
16	100731572	Receptacle Cover, TT-30R	1
17	100731575	Receptacle Cover, 5-20R, Duplex	1
18	100019747	20Amp Circuit Breaker, Push Button	1
19	100019756	30Amp Circuit Breaker, Push Button	1
20	100010885-0003	Spring Washer Ø5	1
21	100020029	Receptacle 5-20R, Duplex	1
22	100020008	Receptacle TT-30R	1
23	100750899-0001	Control Panel Housing	1
24	100730628	One-button Start	1
25	100011446-0001	Flange Nut M4	6
26	100751018	Wire Harness Assembly	1
27	100120180	Cover, Circuit Breaker	3
28	100031552	O-Ring	3

WHEEL KIT DIAGRAM

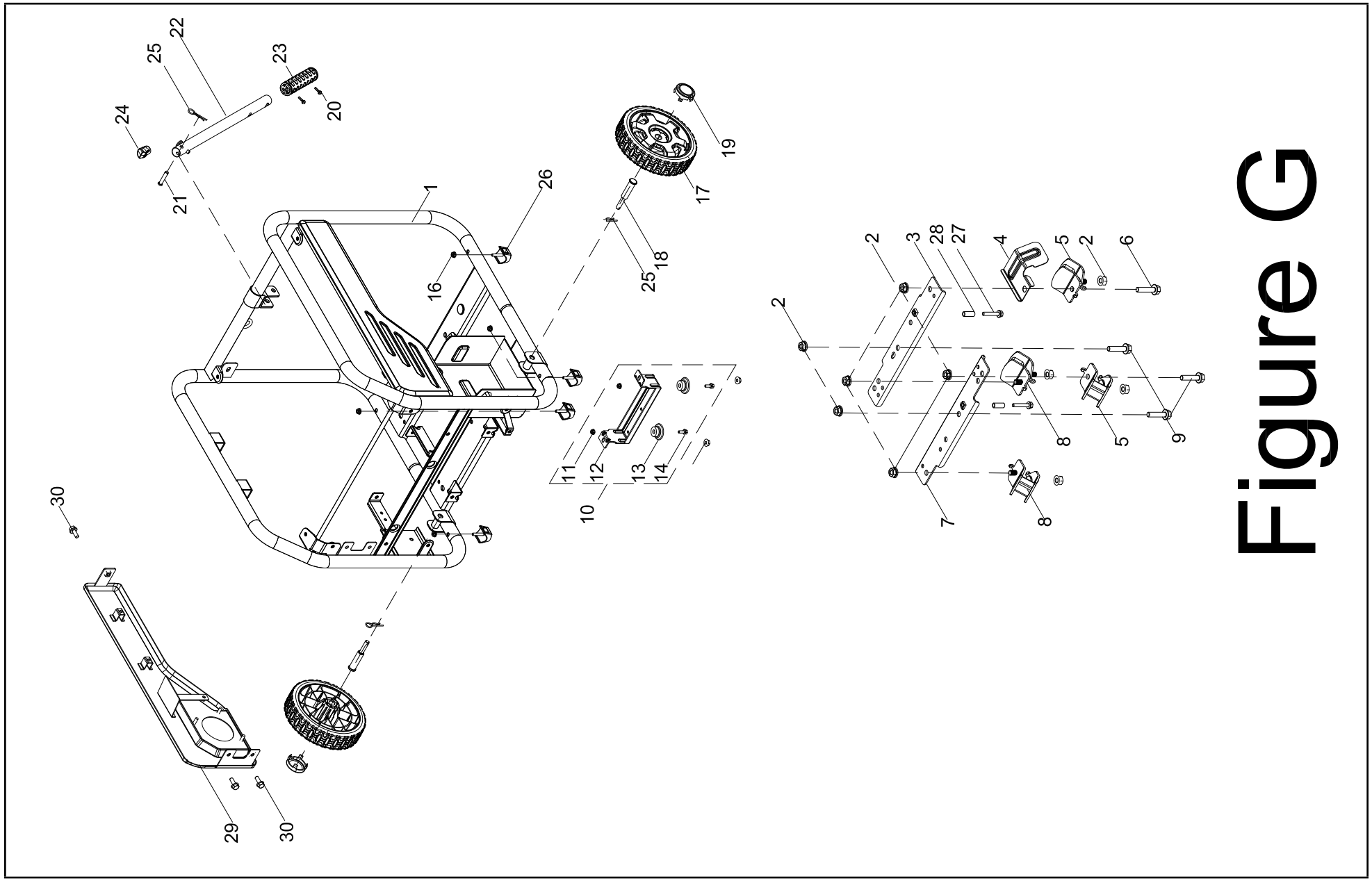

WHEEL KIT PARTS LIST

#	Part Number	Description	Qty.
1	100750780-0001	Frame	1
2	100079483-0001	Flange Nut M8	10
3	100162855	Front Mounting Bracket, Engine	1
4	100162980	Insulator shield	1
5	100093523	Vibration Mount 2, Support	2
6	100011327-0001	Flange Bolt M8 x 43	1
7	100162854	Rear Mounting Bracket, Engine	1
8	100093524	Vibration Mount 1, Support	2
9	100011320-0002	Flange Bolt M8 x 35	3
10	100720829-0001	Support Leg Assembly	1
11	100011452-0003	Flange Nut M6, GB6177.1	2
12	100020659-0001	Support Leg	1
13	100099931	Vibration Mount	2
14	100011265-0003	Flange Bolt M6 x 18	2
15	100011453-0003	Flange Nut M8, GB6177.1	2
16	100011452-0002	Flange Nut M6	4
17	100714023-0001	8 In. Wheel, Yellow	2
18	100714025	Roll Pin Ø10	2
19	100712243-0001	Tire Cover, Yellow	2
20	100095857-0005	Flange Bolt M4 x 18	2
21	100011047-0003	Roll Pin Ø8 x 40	1
22	100716887-0001	Handle	1
23	100716888	Grip, Handle	1
24	100163607	Handle Stop Block	1
25	100714685-0001	R-pin, R5	3
26	100093522	Damping Pad	4
27	100011224-0002	Flange Bolt M6 x 35	2
28	100004221-0001	Bushing, Ø6.5 x Ø10 x 24	2
29	100754835	Appearance Panel, Left	1
30	100011264-0002	Flange Bolt M6 x 16	3
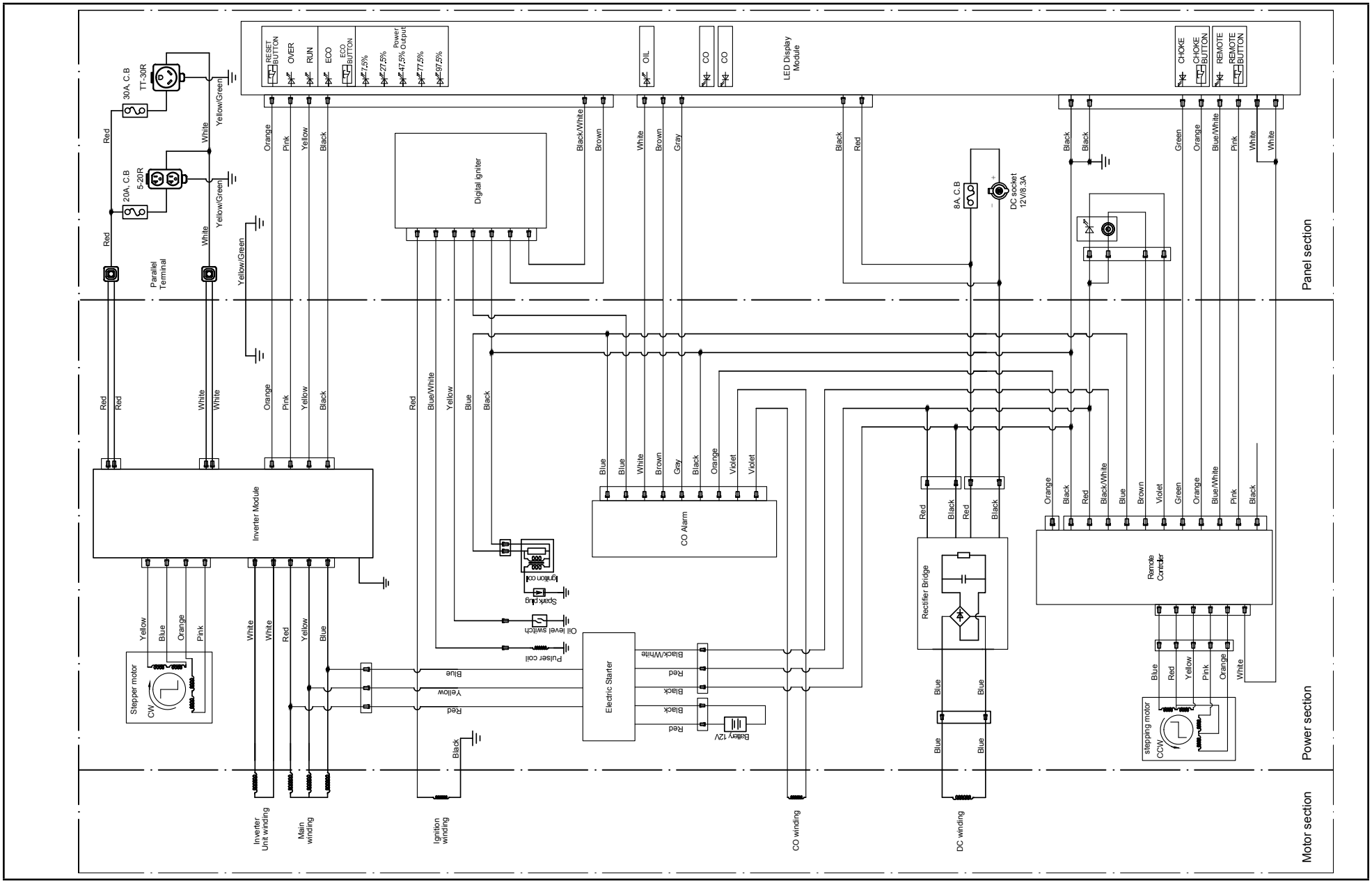
WIRING DIAGRAM