CHAMPION
GLOBAL POWER EQUIPMENT™-MC

OPERATOR'S MANUAL

MODEL #100593
3200 PORTABLE POWER STATION

REGISTER YOUR PRODUCT ONLINE
at **championpowerequipment.com**

ETL CM LISTED C US
Intertek

1-877-338-0999
or visit **championpowerequipment.com**

READ AND SAVE THIS MANUAL. This manual contains important safety precautions which should be read and understood before operating the product. Failure to do so could result in serious injury. This manual should remain with the product.

Specifications, descriptions and illustrations in this manual are as accurate as known at the time of publication, but are subject to change without notice.

3632-M-OP | REV 20231218 EN

TABLE OF CONTENTS

Introduction 3

Safety Definitions 3

Important Safety Instructions 4

- Lithium-ion Battery Safety 5
- Safety and Dataplate Labels 8
- Safety Symbols 9
- Operation Symbols 11
- Quick Start Label Symbols 12

Controls and Features 13

- Power Station 13
- Control Panel 14
- Intelligauge 15
- Industry Canada: ICES-003/NMB-003 19
- Parts Included 19
- Parts Not Included 19

Initial Use 20

- Unpacking 20
- Grounding 20
- Surge Protection 20
- Charging From Wall 20
- Using Included Easy Connect DC Solar Charge Harness 20
- Recommended Solar Panels 21
- Using APP Port 21

Operation 22

- Using the Power Station 22
- Standby Mode 22
- LED Light 22
- Connecting Electrical Loads 23
- Resetting the Output 23
- THD Shield (Total Harmonic Distortion) 23
- Do Not Overload Power Station 24
- Operation at High Altitude 24
- Parallel Operation 24
- Expandable Capacity 25
- Turning Off the Power Station 25
- Moving the Power Station 25

Maintenance 25

- Cleaning the Power Station 25
- Storage 25

Specifications 26

- Power Station Specifications 26
- Battery Specifications 26
- AC Charger Specifications 26
- DC Charger Specifications 26
- Temperature Specifications 26

Troubleshooting 27

FOR PARTS BREAKDOWN

Search by model number at
championpowerequipment.com

INTRODUCTION

Congratulations on your purchase of a Champion Power Equipment (CPE) product. CPE designs, builds, and supports all of our products to strict specifications and guidelines. With proper product knowledge, safe use, and regular maintenance, this product should bring years of satisfying service.

Every effort has been made to ensure the accuracy and completeness of the information in this manual at the time of publication, and we reserve the right to change, alter and/or improve the product and this document at any time without prior notice.

CPE highly values how our products are designed, manufactured, operated, and serviced as well as providing safety to the operator and those around the Power Station. Therefore, it is IMPORTANT to review this product manual and other product materials thoroughly and be fully aware and knowledgeable of the assembly, operation, dangers and maintenance of the product before use. Fully familiarize yourself, and make sure others who plan on operating the product fully familiarize themselves too, with the proper safety and operation procedures before each use. Please always exercise common sense and always err on the side of caution when operating the product to ensure no accident, property damage, or injury occurs. We want you to continue to use and be satisfied with your CPE product for years to come.

When contacting CPE about parts and/or service, you will need to supply the complete model and serial numbers of your product. Transcribe the information found on your product's nameplate label to the table below

CPE TECHNICAL SUPPORT TEAM
1-877-338-0999
MODEL NUMBER
100593
SERIAL NUMBER
DATE OF PURCHASE
PURCHASE LOCATION

SAFETY DEFINITIONS

The purpose of safety symbols is to attract your attention to possible dangers. The safety symbols, and their explanations, deserve your careful attention and understanding. The safety warnings do not by themselves eliminate any danger. The instructions or warnings they give are not substitutes for proper accident prevention measures.

⚠ DANGER

DANGER indicates a hazardous situation which, if not avoided, will result in death or serious injury.

⚠ WARNING

WARNING indicates a hazardous situation which, if not avoided, could result in death or serious injury.

⚠ CAUTION

CAUTION indicates a hazardous situation which, if not avoided, could result in minor or moderate injury.

NOTICE

NOTICE indicates information considered important, but not hazard-related (e.g., messages relating to property damage).

IMPORTANT SAFETY INSTRUCTIONS

⚠ WARNING

Cancer and Reproductive Harm – www.P65Warnings.ca.gov

⚠ WARNING

Read all safety warnings and instructions. Failure to follow warnings and instruction may result in electric shock, fire and/or cause serious personal injury. Save all warnings and instruction.

⚠ DANGER

Power Station generates powerful voltage.

Keep your Power Station in a dry, well-ventilated area when in use.

Do not operate the Power Station with a damaged cord, plug, or a damaged output cable. Use only Champion electrical cords for proper application.

Do not allow children or unqualified persons to charge, operate or service the Power Station.

Do not operate Power Station in wet conditions. To avoid short circuits or electric shock do not allow unit to get wet. In the event the unit does get wet, let the unit dry completely before using.

Always use a ground fault circuit interrupter (GFCI) while charging in damp areas and areas containing conductive material such as metal decking.

Do not allow fluids to flow into Power Station. Corrosive or conductive fluids, such as seawater, industrial chemicals, bleach or bleach containing products can cause a short circuit, damaging the Power Station and voiding the warranty.

This equipment has internal arcing or sparking parts which should not be exposed to flammable vapors or liquids.

⚠ WARNING

To avoid fire or electrical shock hazard, observe all ratings on the Power Station and accessory products you intend to use.

⚠ CAUTION

This device is intended for temporary outdoor use only. Reasonable care should always be exercised when using this device outdoors in damp conditions, but should never be used in wet conditions.

⚠ WARNING

Do not use Power Station for medical life support uses.

In case of emergency, call 911 immediately.

NEVER use this product to power life support devices or life support appliances.

Inform your electricity provider immediately if you or anyone in your household depends on electrical medical equipment to live.

Inform your electrical provider immediately if a loss of power would cause you or anyone in your household to experience a medical emergency.

⚠ WARNING

Power Station produces heat.

Do not touch hot surfaces.

Allow equipment to cool before touching.

⚠ WARNING

Exceeding the Power Station's running capacity can damage the Power Station and/or electrical devices connected to it.

DO NOT overload the Power Station.

DO NOT tamper or modify the Power Station in any way.

⚠ WARNING

Improper treatment or use of the Power Station can damage it, shorten its life and void the warranty.

Use the Power Station only for intended uses.

DO NOT expose Power Station to moisture, dust, or dirt.

DO NOT allow any material to block the cooling slots.

If connected devices overheat, turn them off and disconnect them from the Power Station.

DO NOT use the Power Station if:

- Electrical output is lost
- Equipment sparks, smokes or emits flames
- Equipment vibrates excessively

Lithium-ion Battery Safety

⚠ DANGER

Electrolyte inside the battery is harmful to skin and eyes. Electrolyte may pose an increased risk of harm if not handled properly.

Under abusive conditions, liquid may be ejected from the battery; avoid contact. Liquid ejected from the battery may cause irritation or burns. If contact accidentally occurs, flush with water. If the battery leaks and electrolyte gets in your eyes, do not rub them, immediately flood eye with running cold water for at least 10 minutes and seek medical help. If left untreated, electrolyte can cause permanent eye injury. Keep away from children.

⚠ DANGER

This Power Station generates the same potential lethal AC electrical voltage as a standard building wall outlet.

Always treat the Power Station as you would a normal AC outlet on a standard building wall.

⚠ WARNING

When using the Power Station:

- Always use in a dry well ventilated area while in use and do not obstruct fan openings on unit. Inadequate ventilation may cause execessive heat and damage the unit.
- Always keep the unit clean and dry and inspect for dirt, dust, or moisture prior to every use.
- Power cord plugs must always match the outlet. Never modify the plug in any way. Do not use any adapter plugs with earthed (grounded) power tools.
- Connect only to properly grounded outlets.
- To reduce risk of damage to the electric plug and cord, pull the plug rather than the cord when disconnecting the Power Station. Never use the cord for carrying, pulling or unplugging the tool.
- Do not use this Power Station if the power cord or the battery cables are damaged in any way.
- Always use a suitable extension cord to reduce the risk of electric shock.
- Always keep the cord away from heat, oil, sharp edges or moving parts.
- Always position cords carefully to avoid hazardous conditions. Tripping or snagging on cords can cause injury or cause product damage. Never allow cords to run through puddles or across wet ground.
- Use of an accessory attachment not recommended or sold by Champion Power Equipment may result in a risk of fire, electric shock, or injury to persons.
- To reduce the risk of electric shock always unplug the cord from outlet when not in use and before servicing or cleaning.
- Do not insert foreign objects into outputs or ventilation holes.

⚠ WARNING

- Do not overload the Power Station's capacity. Exceeding the wattage/amperage capacity may damage the power supply and/or electrical devices connected to it.
- Do not connect Power Station output to a building's electrical system.
- Do not use this unit if you do not understand these operating instructions.
- Maintain the labels and nameplates on this Power Station. These carry important information.

⚠ WARNING

- Do not use a Power Station or appliance that is damaged or modified. Damaged or modified internal batteries may exhibit unpredictable behavior resulting in fire, explosion or risk of injury.
- Do not remove cover. No user serviceable parts inside.
- Do not tamper or disassemble the Power Station to attempt service or replace the battery. Incorrect reassembly may result in a risk of fire, electric shock or personal injury.
- For service information please contact our Champion Technical Support Team at 1-877-338-0999. Please have your serial number and model number available when service, repair or replacement is required.
- Never place fingers or hands inside the product.

⚠ WARNING

- To reduce the risk of injury or damage, avoid contact with any hot surface.
- Do not use the Power Station near sources of high heat or fire. Exposure to fire or temperature above 265°F (130°C) may cause explosion.
- Do not discharge the Power Station battery in temperatures below 5°F (-15°C) or above 104°F (40°C).
- Do not allow fluids to flow into the Power Station. Corrosive or conductive fluids, such as seawater, certain industrial chemicals, and bleach or bleach containing products, etc., can cause a short circuit.
- Follow all charging instructions and do not charge the Power Station outside the temperature range specified in the instructions. Charging improperly or at temperatures outside the specified range may damage the battery and increase the risk of fire.

When charging the Power Station:

- Always charge the Power Station's internal battery in a well-ventilated area.
- Do not use the AC charging cable outdoors.
- Do not expose AC charging cable to oil, oil vapor, grease, gasoline, gasoline vapors or other caustic substances that may damage the AC charging cable.
- Do not charge the Power Station below 32°F (0°C) or above 113°F (45°C).
- Do not charge Power Station in rain, snow, damp or wet locations.
- Do not overcharge the Power Station. Use only supplied AC charging cable and follow solar charging guidelines and voltage and current limits.
- Always connect to properly grounded outlets.
- Never use Power Station or charger in the presence of explosive atmospheres (gaseous fumes, dust or flammable materials).
- Never leave the Power Station unattended while charging. If the internal battery smokes, or gives off an odor during charging, terminate charging immediately.
- During charging, if the Power Station battery becomes hot to the touch, stop charging. Allow Power Station to cool before resuming.
- Always unplug charger when not in use.
- To reduce the risk of electric shock, always unplug charger before cleaning or maintenance. Do not allow water to flow into plug. Use a Ground Fault Circuit Interrupter (GFCI) to reduce shock hazards.

Grounding Information:

Your Power Station must be properly connected to an appropriate ground to help prevent electric shock.

⚠ WARNING

Failure to properly ground the Power Station can result in electric shock.

A ground terminal connected to the panel of the Power Station has been provided (see Controls and Features for terminal location). For remote grounding, connect a length of heavy gauge (12 AWG minimum) copper wire between the Power Station ground terminal and a copper rod driven into the ground. We strongly recommend that you consult with a qualified electrician to ensure compliance with local electrical codes.

When storing the Power Station:

- This Power Station is intended to be stored indoors and shall not be stored or left outdoors when not in use.
- Do not stack any items on top of the Power Station during storage.
- Store your Power Station in a cool, dry place between 32°F (0°C) and 104°F (40°C). The ideal storage temperature is 59°F (15°C).
- Do not store Power Station where temperatures may exceed 104°F (40°C) such as in direct sunlight, in a vehicle or metal buildings especially during the summer.
- Do not store the Power Station near sources of high heat or fire.
- Do not store the Power Station when battery level is at 20% or less state of charge (SOC). The ideal storage SOC is 40-60%.

– When storing the Power Station for periods of one month or longer, store the Power Station at an SOC of about 60%. Every three months, discharge the Power Station to 40% and recharge back to 60% to extend the battery life.
– Lithium batteries must be charged regularly to perform well. The Power Station must be fully charged by you at least once every 6 months (180 days).

In case of battery damage:

– If damaged, the internal battery may emit hazardous fumes. If fumes are present, move Power Station to a well-ventilated area.
– Do not try to repair the Power Station or replace the battery.

Safe disposal of Lithium-ion battery:

– Lithium-ion batteries contain elements that pose health risks to individuals if they are allowed to leach into the ground water supply. In many states and counties, it may be illegal to dispose of these batteries in standard household waste.
– To dispose the battery safely, apply tape over any exposed connectors to prevent accidental shorting of the positive and negative terminals of the battery during transport.
– Place the battery in a clear sturdy plastic bag, seal the bag and deposit the battery into the recycling container at your local municipal hazardous waste (HHW) recycling location.
– In the United States and Canada, a large network of over 30,000 battery drop-off locations may be found at www.call2recycle.org.
– Never dispose of the battery in a fire or incinerator, as the battery may catch fire and explode.

Safety and Dataplate Labels

These labels warn you of potential hazards that can cause serious injury. Read them carefully.

If a label comes off or becomes hard to read, contact Technical Support Team for possible replacement.

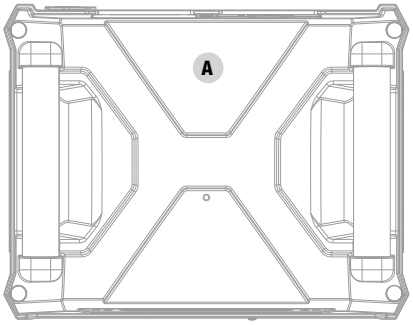

Top

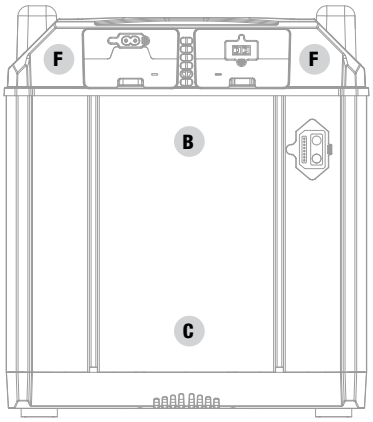

Back

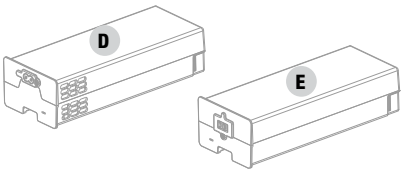

Inside

	LABEL	DESCRIPTION
A		Safety Symbols
B	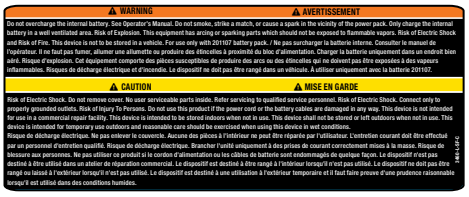 ⚠ WARNING ⚠ AVERTISSEMENT ⚠ CAUTION ⚠ MISE EN GARDE	Safety Warning
C	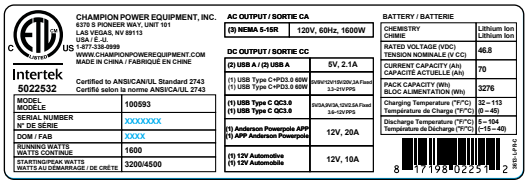 CHAMPION POWER EQUIPMENT, INC. 6370 S PIONEER WAY, UNIT 101 LAS VEGAS, NV 89113 USA / É.-U. 1-877-338-0999 WWW.CHAMPIONPOWEREQUIPMENT.COM MADE IN CHINA / FABRIQUÉ EN CHINE Intertek 5022532 Certified to ANSI/CAN/UL Standard 2743 Certifié selon la norme ANSI/CAN/UL 2743 MODEL / MODÈLE 100593 SERIAL NUMBER / N° DE SÉRIE XXXXXXX DOM / FAB XXXX RUNNING WATTS / WATTS CONTINUE 1600 STARTING/PEAK WATTS / WATTS AU DÉMARRAGE / DE CRÊTE 3200/4500 AC OUTPUT / SORTIE CA (3) NEMA 5-15R 120V, 60Hz, 1600W DC OUTPUT / SORTIE CC (2) USB A / (2) USB A 5V, 2.1A (1) USB Type C+PD3.0 60W (1) USB Type C+PD3.0 60W 5V/9V/12V/15V/20V,3A Fixed 3.6–21VPPS (1) USB Type C QC3.0 (1) USB Type C QC3.0 5V/6A/9V/6A,12V/3.5A Fixed 3.6–12VPPS (1) Anderson Powerpole APP (1) APP Anderson Powerpole 12V, 20A (1) 12V Automotive (1) 12V Automobile 12V, 10A BATTERY / BATTERIE CHEMISTRY / CHIMIE Lithium Ion / Lithium Ion RATED VOLTAGE (VDC) / TENSION NOMINALE (V CC) 46.8 CURRENT CAPACITY (Ah) / CAPACITÉ ACTUELLE (Ah) 70 PACK CAPACITY (Wh) / BLOC ALIMENTATION (Wh) 3276 Charging Temperature (°F/°C) / Température de Charge (°F/°C) 32 – 113 (0 – 45) Discharge Temperature (°F/°C) / Température de Décharge (°F/°C) 5 – 104 (–15 – 40) 8 17198 02251 2	Power Station Dataplate
D	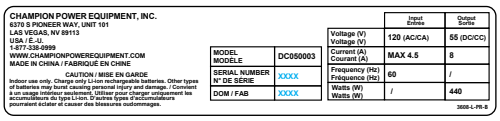 CHAMPION POWER EQUIPMENT, INC. 6370 S PIONEER WAY, UNIT 101 LAS VEGAS, NV 89113 USA / É.-U. 1-877-338-0999 WWW.CHAMPIONPOWEREQUIPMENT.COM MADE IN CHINA / FABRIQUÉ EN CHINE CAUTION / MISE EN GARDE MODEL / MODÈLE DC050003 SERIAL NUMBER / N° DE SÉRIE XXXX DOM / FAB XXXX Input / Entrée Output / Sortie Voltage (V) / Voltage (V) 120 (AC/CA) 55 (DC/CC) Current (A) / Courant (A) MAX 4.5 8 Frequency (Hz) / Fréquence (Hz) 60 / Watts (W) / Watts (W) / 440 3600-L-PR-8	AC Charger Dataplate
E	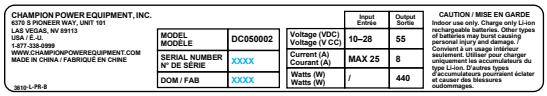 CHAMPION POWER EQUIPMENT, INC. 6370 S PIONEER WAY, UNIT 101 LAS VEGAS, NV 89113 USA / É.-U. 1-877-338-0999 WWW.CHAMPIONPOWEREQUIPMENT.COM MADE IN CHINA / FABRIQUÉ EN CHINE MODEL / MODÈLE DC050002 SERIAL NUMBER / N° DE SÉRIE XXXX DOM / FAB XXXX Input / Entrée Output / Sortie Voltage (VDC) / Voltage (V CC) 10–28 55 Current (A) / Courant (A) MAX 25 8 Watts (W) / Watts (W) / 440 CAUTION / MISE EN GARDE 3610-L-PR-8	DC Charger Dataplate
F	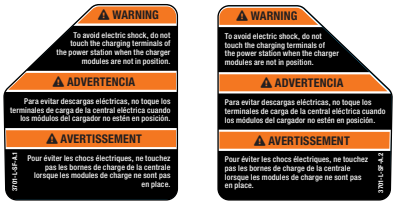 ⚠ WARNING To avoid electric shock, do not touch the charging terminals of the power station when the charger modules are not in position. ⚠ ADVERTENCIA Para evitar descargas eléctricas, no toque los terminales de carga de la central eléctrica cuando los módulos del cargador no estén en posición. ⚠ AVERTISSEMENT Pour éviter les chocs électriques, ne touchez pas les bornes de charge de la centrale lorsque les modules de charge ne sont pas en place.	Charging Terminals Warning

Safety Symbols

Some of the following symbols may be used on this product. Please study them and learn their meaning. Proper interpretation of these symbols will allow you to more safely operate the product.

SYMBOL	MEANING
	Read Operator's Manual. To reduce the risk of injury, user must read and understand operator's manual before using this product.
	Eye protection. Always wear eye protection with side shields marked to comply with ANSI Z87.1.
	Ground. Consult with local electrician to determine grounding requirements before operation.
	Electric Shock. Failure to use in dry conditions and to observe safe practices can result in electric shock.
	Shield eyes. Explosive gases can cause blindness or injury. If damaged, battery may emit hazardous fumes. If fumes present, move battery to a well-ventilated area.
	Fire/Explosion. Batteries and its vapors are extremely flammable and explosive. Fire or explosion can cause severe burns or death. Keep Power Station at least 5 feet (1.5m) from all objects to prevent combustion.
	Blindness or severe burns. Electrolyte solution can cause blindness or severe burns.
	Open Flame Alert. Keep away from fuel, smoking, open flames, sparks, pilot lights, heat, and other ignition sources.

SYMBOL	MEANING
	Wet Conditions Alert. Do not operate Power Station in wet conditions.
Li-ion	**This product uses lithium-ion (Li-ion) batteries.** Local, state, or federal laws prohibit disposal of Li-ion batteries in ordinary trash. In the United States and Canada, a large network of over 30,000 battery drop-off locations may be found at www.call2recycle.org and/or consult your local waste authority for information regarding available recycling disposal options.

Operation Symbols

Some of the following symbols may be used on this product. Please study them and learn their meaning. Proper interpretation of these symbols will allow you to more safely operate the product.

SYMBOL	MEANING
	Hold for 3 seconds to power ON/OFF. Press once (1) to power AC outlets ON/OFF. Icon will slowly blink blue when display is OFF and Power Station is in standby mode.
	Circuit Breaker Reset: Push
	Parallel Connection(s)
	AC Output
	DC Output
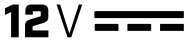	**12V Direct Current**
	Ground Terminal
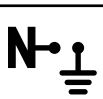	**Neutral Floating.** Neutral circuit **IS NOT** electrically connected to the frame/ ground of the Power Station.

SYMBOL	MEANING
	USB Connection Port
	Qualcomm Quick Charge 3+
1x	**Overload Reset:** Press once (1) to reset.
5x	**THD Shield:** Press five (5) times to turn ON/OFF.
	LED Light Button
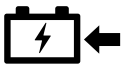	**External Battery Input**
	AC Charging Input
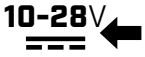	**DC Charging Input**
	Push to unlock cover

Quick Start Label Symbols

Some of the following symbols may be used on this product. Please study them and learn their meaning. Proper interpretation of these symbols will allow you to more safely operate the product.

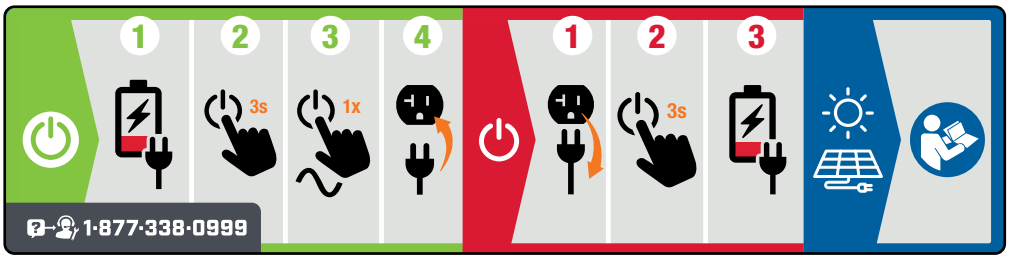

Using the Power Station

NOTICE

The Power Station must be fully charged before use and at least once every 6 months (180 days) thereafter.

The Intelligauge display, described later, will learn for the first 1 or 2 charge/discharge cycles. Until then, the battery level and time to charge or discharge may not be accurate.

1. Ensure the Power Station is charged before operation.
2. Press and hold the **power button** for 3 seconds until display illuminates.
3. Press **power button** once to power AC outlets. DC ports are always live.

NOTICE

To turn THD Shield off, press THD Shield button 5x within three seconds.

4. Plug in desired devices.

NOTICE

To protect sensitive electronics, as the Power Station's battery level drops below 30%, THD Shield is designed to shut off AC power output when the AC running watts are too high and it can no longer maintain a pure sine wave (<5% THD). The letters "THD" will appear in red. See *THD Shield (Total Harmonic Distortion)* section.

– The Power Station will remain in standby mode for 4 hours, then shut off if it does not supply at least 5 watts to an external device or appliance. It will not shut off if it is plugged in and charging.

Turning off the Power Station

1. Turn off and unplug all connected electrical loads.
2. Press and hold the **power button** for 3 seconds until display turns off.
3. Charge the Power Station.

For solar charging instructions see *Using included Solar Charging Cable*, *Recommended Solar Panels*, and *Using APP Port*.

CONTROLS AND FEATURES

Read this operator's manual before operating your Power Station. Familiarize yourself with the location and function of the controls and features. Save this manual for future reference.

Power Station

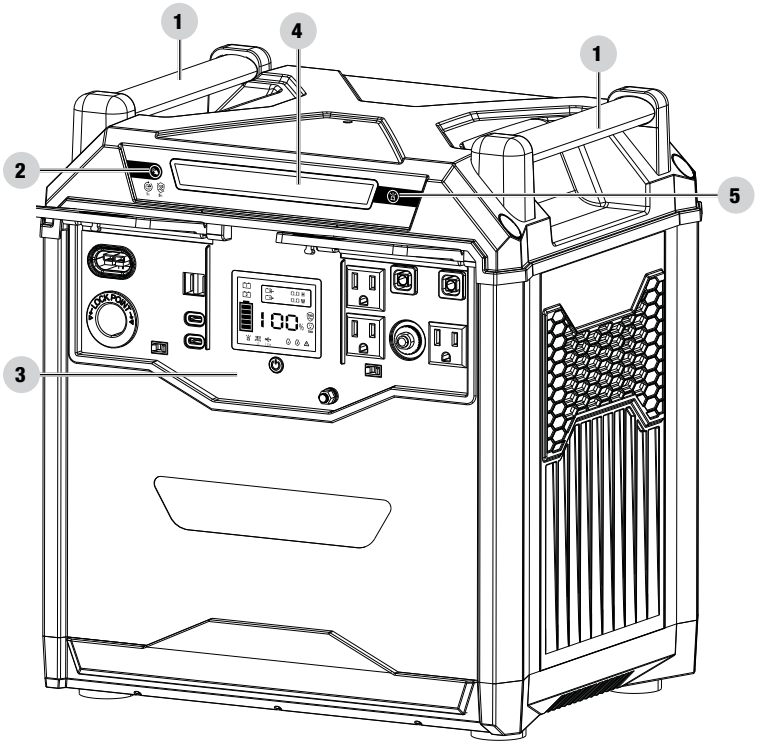

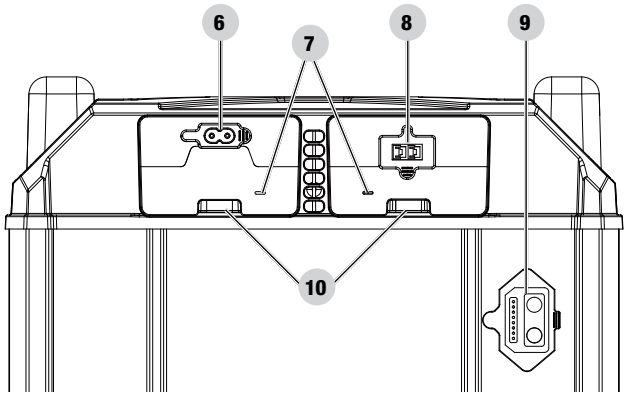

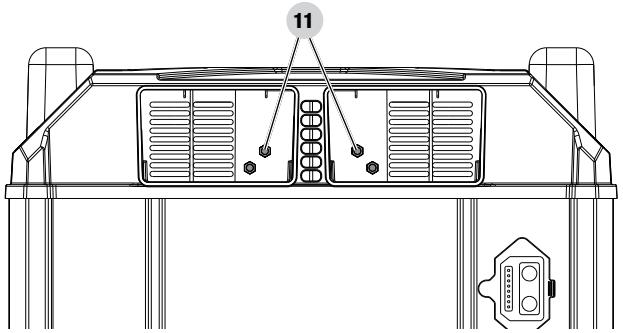

1. **Carrying Handle(s)** – Used to lift or carry the unit.
2. **Overload Reset/THD Shield Button** – Press 1x to re-energize both AC and DC outlets after overload fault. Press 5x in three seconds to turn THD Shield ON/OFF.
3. **Control Panel** – See *Control Panel* section.
4. **LED Light** – Used to illuminate the work area in front of the Power Station.
5. **LED Light Button** – Used to turn LED light ON/OFF.
6. **AC Fast Charge - 120V AC, 60Hz, 4.5A MAX** – Used to charge the Power Station from a regular wall outlet. Uses included cord.
7. **Charging Indicators** – Illuminated when AC or Solar charger is connected to respective source of input power. Steady RED when charging or solid GREEN when fully charged.
8. **DC Fast Charge - MPPT Solar - 10V-28V DC, 25A MAX (APP Anderson Power Pole DC)** – Used to charge the Power Station from solar panel(s). Uses included Easy Connect DC Solar Charge Harness from 1x APP (plug into the Power Station) to 3x MC4 (connect to the solar panels) connectors - Solar panels (not included).
9. **External Battery Port** – Used to increase the Power Station run time by adding additional external batteries (Model 201107 - Expansion Battery not included, sold separately).
10. **Charging Module Slots** – Used to remove or connect the charging module from the unit. When necessary, gently pry and remove the charger module out with a flathead screwdriver.
11. **Charging Terminals** – Used to connect the charging modules when positioned in the charger module slots. Feature view shown with charging modules removed.

Control Panel

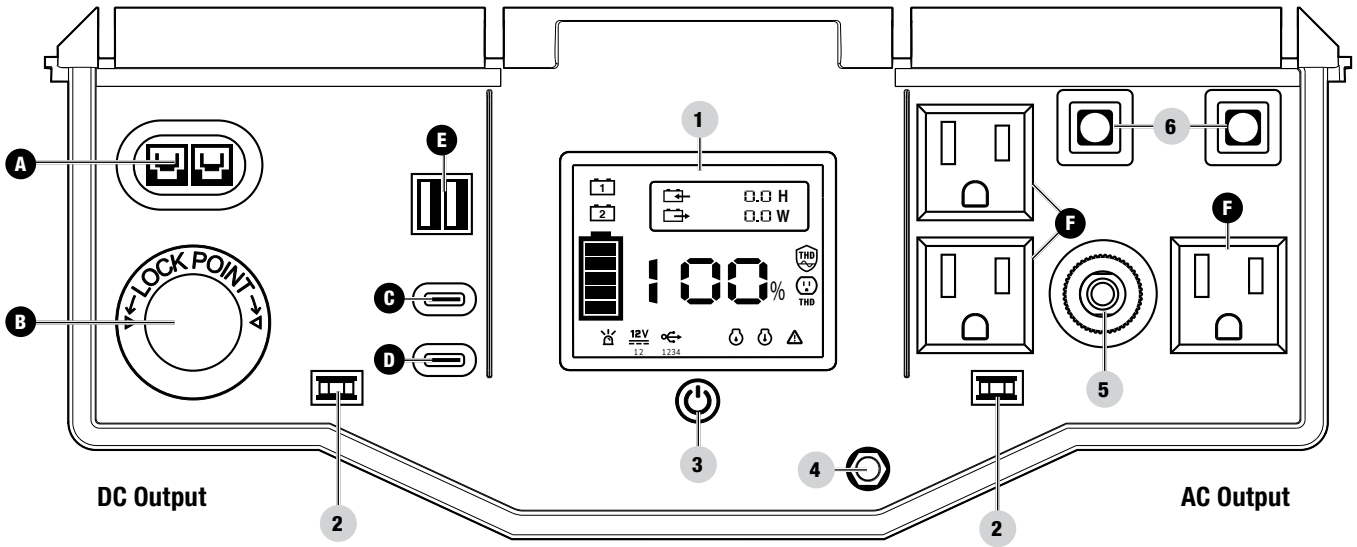

1. **Intelligauge** – See *Intelligauge* section.
2. **Cover Lock** – Push the the cover to unlock and lift to open or push to close. Will click upon close or open.
3. **On/Off Button** – Turns the Power Station ON/OFF when pressed for three seconds. Powers AC receptacles ON/OFF when pressed one time. DC receptacles are always live.
4. **Ground Terminal** – Consult an electrician for local grounding regulations.
5. **Circuit Breakers (Push Reset)** – Protects the Power Station against AC overloads.
6. **Parallel Outlets** – Used to parallel two Power Stations together for increased power output. (Model 201108 – Parallel Kit not included, sold separately).

RECEPTACLES		
A		**12V DC, 20A (APP Anderson Power Pole)** May be used to supply electrical power for operation of 12 Volt DC, 20 Amp electrical loads.
B	DC	**12V DC, 10A (Regulated Automotive)** May be used to supply electrical power for operation of 12 Volt DC, 10 Amp electrical loads.
C		**5V, 9V, 12V, 15V, 20V, DC, 3A Fixed or 3.3V-21V DC PPS (USB Type-C + PD)** Port may be used to supply 5V/9V/12V/15V/20V,3A, Fixed or 3.3-21V PPS DC to power cellphones, laptops, tablets, and similar devices up to a maximum of 60W with PD compatible devices.
D		**5V/3A, 9V/3A, 12V/2.5A Fixed or 3.6V-12V DC PPS (USB Type-C QC)** Port may be used to supply 5V/9V,3A and 12V/2.5A Fixed or 3.6-12V PPS DC to power cellphones, laptops, tablets, and similar devices up to a maximum of 30W with Quick Charge 3.0 (QC 3.0) compatible devices.
E		**(2x) 5V DC, 2.1A (USB Type-A)** Each port may be used to supply a maximum of 5 Volts DC, 2.1 Amps to power cellphones, laptops, tablets, and similar devices.
F		**(3x) 120V AC, 15A (NEMA 5-15R)** May be used to supply electrical power for operation of 120 Volt AC, 15 Amp, single phase, 60 Hz electrical loads.

Intelligauge

This meter displays a variety of info such as input/output power, charge/discharge times, as well as faults, errors, and protection codes to help diagnose malfunctions in the Power Station.

The top displays input and output information.

The bottom displays output percent (%), battery level, and icons related to which outlets are in use, specific warnings or other faults and functions.

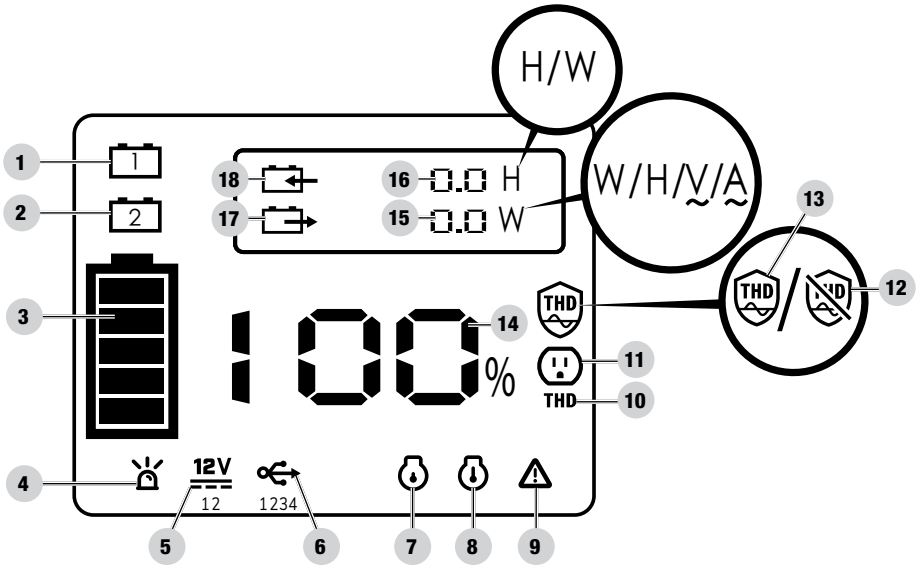

1. **Battery 1** – Displays Power Station info when illluminated.
2. **Battery 2** – Automatically toggles and illuminates to display external battery info when external batteries are paired and connected. (Model 201107 - Expansion Battery Pack not included, sold separately).
3. **Fuel Gauge** – Shows battery level in increments. Each bar represents approximately 20%.
4. **LED** – LED light is on.
5. **12V** – Always ON. The 12V DC outlet is powered on and ready for use when steady blue. Steady red if a fault has occured in 12V outlet.*
6. **USB** – Always ON. The USB outlets are powered on and ready for use when steady blue. Steady red if a fault has occurred in any of the USB outlets.*
7. **Low Temperature** – Steady red if internal temperature too low.
8. **High Temperature** – Steady red if internal temperature too high.
9. **Warning** – Flashes red when battery or circuitry communication fault has occurred. Steady red when Battery Management System (BMS) fault has occurred.
10. **THD** – Steady red when THD is above 5% and THD Shield is enabled. AC power output will be shut off. Flashes red if THD is above 5% and THD Shield is disabled. AC output will remain on.
11. **120V** – The 120V AC outlets are powered on and ready for use when steady blue. Steady red if overloaded or fault has occurred in 120V AC inverter or outlets (see *Resetting the Output* section).
12. **THD Shield Disabled** – Steady blue when THD Shield disabled and THD below 5%. Flashes blue when THD Shield disabled and THD above 5%. AC power output will remain on.
13. **THD Shield Enabled** – Steady blue when enabled. Safely stops AC power output when THD Shield rises above 5% to protect sensitive electronics. See *THD Shield (Total Harmonic Distortion)* section.
14. **Fuel Gauge** – Shows battery level in %. When multiple external batteries connected, the percentage of each battery is added together and can read higher than 100% when battery 2 icon is illuminated.
15. **Output** Watts (W), Hours until empty (H), AC Volts (V), and AC Amps (A).
16. **Input** Watts (W) or Hours until full (H).
17. **Battery Out** – Indicates battery is discharging.
18. **Battery In** – Indicates battery is charging.

**See 12V DC and USB Fault Locators in Indicators table below for description of numbers below icon.*

Display Modes

MODE	DESCRIPTION	
Charging (Hours)	Example: 4.0 Hours to charge to full, 0 watts out, battery is at 10%	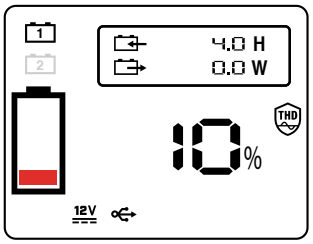
Charging (Watts)	Example: 384 Watts charging in, 0 watts out, battery is at 10%	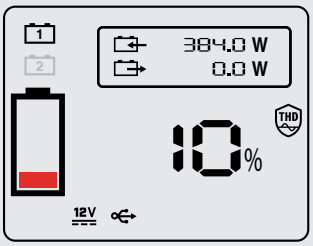
Discharging (Hours)	Example: 2.0 Hours to empty, 0 watts in, battery is at 10%	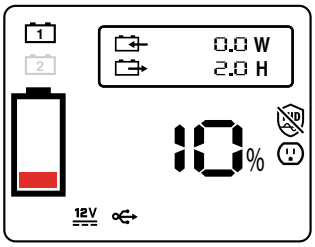
Discharging (Watts)	Example: 0 watts in, 1600 watts out, battery is at 10%	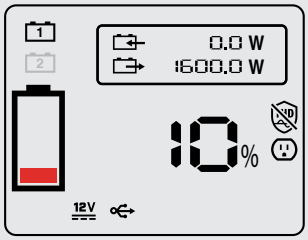

Indicators

MODE	DESCRIPTION	
THD Shield Enabled (Default Mode), AC Output OFF	Example: THD Shield enabled icon will always be steady blue. DC ports are always live. This is the default display upon startup.	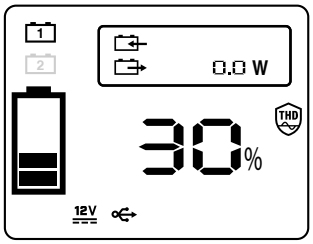
THD Shield Enabled, THD Fault >5%	Example: THD Shield enabled icon will always be steady blue. “THD” steady red. AC output shut off due to THD above 5%.	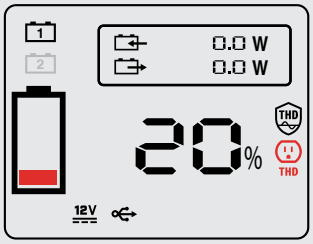
THD Shield Disabled, THD<5%	Example: THD Shield disabled icon will be steady blue when THD is below 5%. AC output will not shut off until battery is discharged.	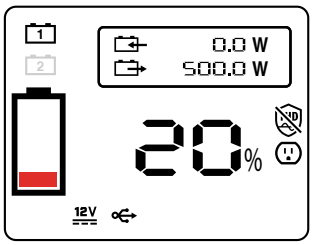
THD Shield Disabled, THD>5%	Example: THD Shield disabled icon will flash blue and “THD” will flash red simultaneously when THD is above 5%. AC output will not shut off until battery is discharged.	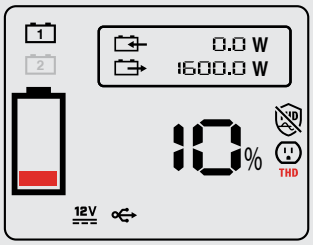
High Temperature Warning	Example: Steady red when the Power Station has experienced a high temperature event.	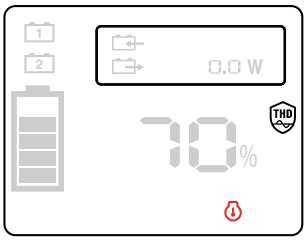

MODE	DESCRIPTION	
Low Temperature Warning	Example: Steady red when the Power Station has experienced a low temperature event.	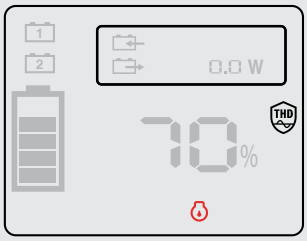
LED ON	Example: The LED icon is showing the LED is on.	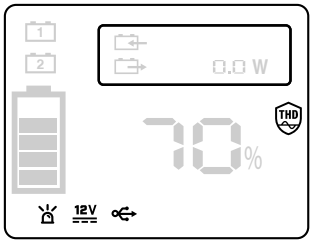
12V DC and USB Fault Locators	The numbers below the 12V DC and USB fault indicators specify which port is experiencing a fault. See figure to the right.	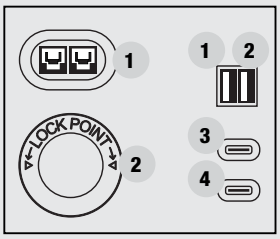
12V DC/USB Port Fault	Example: Fault in 12V DC port location 1 (APP) and USB port location 3 (USB PD). Check devices, cables, or lower load. Press overload reset button.	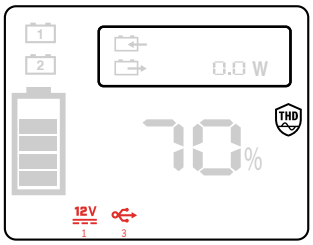
120V AC THD Protection	Example: High THD output. Reduce load and press overload reset button and/or charge the Power Station. See Total Harmonic Distortion section.	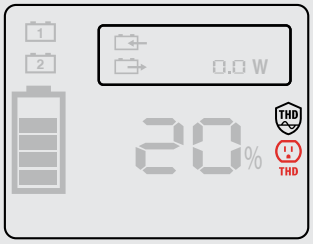
120V AC Fault or Overload	Example: Fault in AC inverter or outlets when flashing red. Overloaded when steady red. Reduce load and press overload reset button.	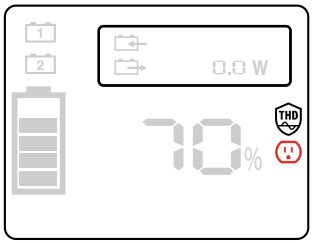

Industry Canada: ICES-003/NMB-003

This device complies with Industry Canada license - exempt RSS standard(s).

Operation is subject to the following two conditions:

1. This device may not cause interference, and
2. This device must accept any interference, including interference that may cause undesired operation of the device.

Parts Included

Accessories

AC Charge Cable 1

Easy Connect DC Solar Charge Harness 1

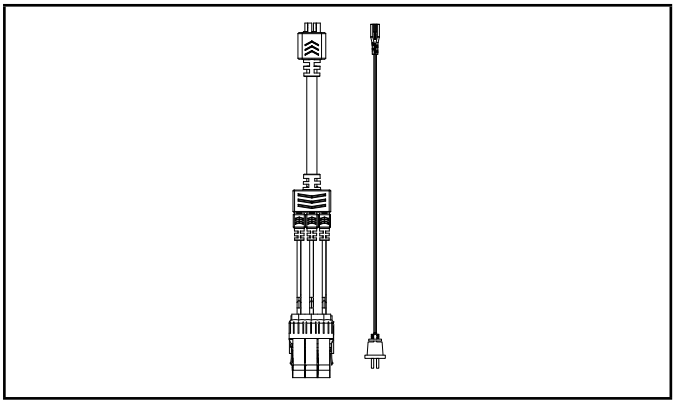

Parts Not Included

– Solar Panels

INITIAL USE

Your Power Station must be charged before first use.

If you have any questions regarding the use of your Power Station, call our Technical Support Team at 1-877-338-0999. Please have your serial number and model number available.

Unpacking

1. Set the shipping carton on a solid, flat surface.
2. Remove everything from the carton except the Power Station.
3. Using the carrying handles of the unit, carefully remove the Power Station from the box (two people lifting is recommended).

Grounding

Your Power Station must be properly connected to an appropriate ground to help prevent electric shock.

⚠ WARNING

Failure to properly ground the Power Station can result in electric shock.

A ground terminal connected to the panel of the Power Station has been provided (see Controls and Features for terminal location). For remote grounding, connect a length of heavy gauge (12 AWG minimum) copper wire between the Power Station ground terminal and a copper rod driven into the ground. We strongly recommend that you consult with a qualified electrician to ensure compliance with local electrical codes.

Surge Protection

Electronic devices, including computers and many programmable appliances use components that are designed to operate within a narrow voltage range and may be affected by momentary voltage fluctuations. While there is no way to prevent voltage fluctuations, you can take steps to protect sensitive electronic equipment.

– Install UL1449, CSA-listed, plug-in surge suppressors on the outlets feeding your sensitive equipment.
Surge suppressors come in single- or multi-outlet styles. They're designed to protect against virtually all short-duration voltage fluctuations.

Charging From Wall

NOTICE

The Power Station must be fully charged every 180 days when in storage, to keep the internal battery in good operating condition.

NOTICE

The Power Station can be safely charged through the AC and DC inputs simultaneously to increase charging power and reduce charging time.

1. Remove the rubber plug covering the AC input port on the AC Charging module.
2. Plug the AC Charging Cable into the AC input port on the back of the Power Station.

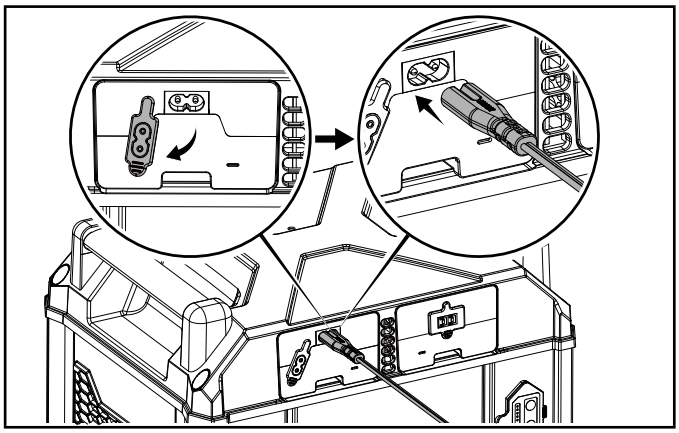

3. Plug the other end into a standard wall outlet.

Using Included Easy Connect DC Solar Charge Harness

(For solar panels with MC4 connector)

NOTICE

The Power Station's charging wattage is rated at 440W. However, depending on environmental conditions and solar panel efficiency, it may be necessary to connect more than any combination of 440W of solar panels to reach the full 440W of charging power. It will not damage the Power Station to add solar panels until the charging power reaches 440W.

The charging power and rate is reduced as the battery level gets closer to 100% to safely charge the internal battery.

It is important to adjust your solar panels to face the sun as best as possible throughout the day to achieve maximum charging efficiency.

For example, on a cloudy day, two 200W (400W total) rated solar panels may only produce 250W of charge. It may be necessary, and will not harm you Power Station, to add another 200W solar panel to the harness.

1. Remove the rubber plug covering the DC input port and connect the APP end of the Easy Connect DC Solar Charge Harness (included) to the APP input port on the back of the Power Station.

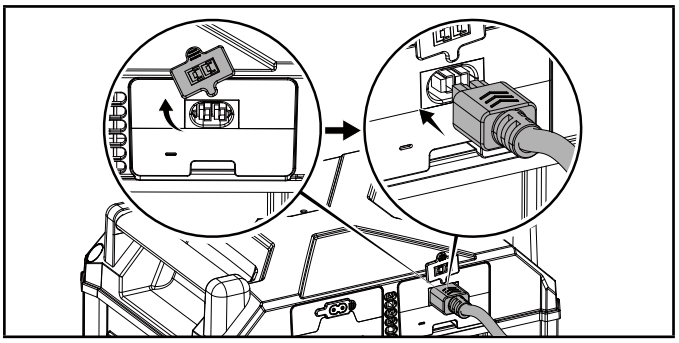

2. Connect up to three solar panels using the MC4 connectors.

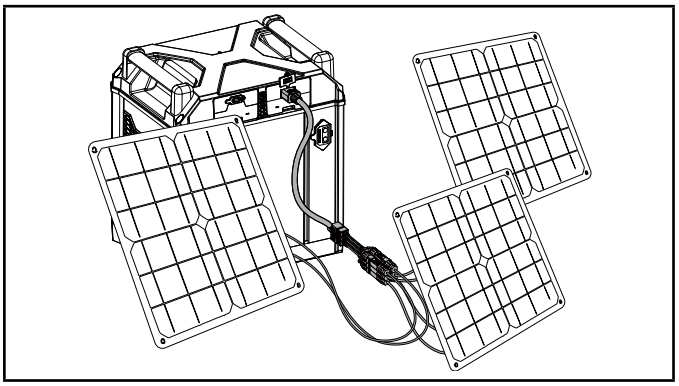

3. If not using all 3 connections, you can remove any spare connectors and store in a safe and dry location.

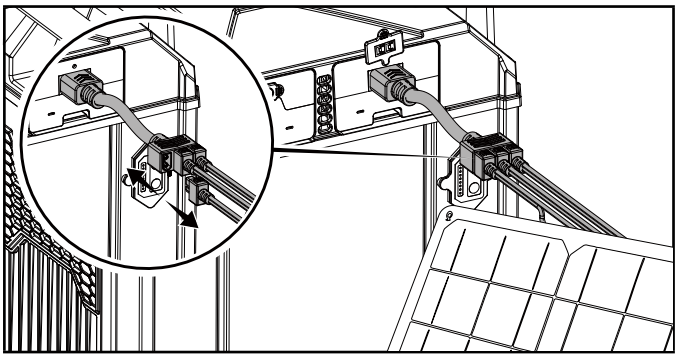

Recommended Solar Panels

NOTICE

It will not damage, and often times is necessary, to use more than the 440W of solar panels to achieve actual 440W of charging.

Always use panels with the same nominal voltage rating when using multiple solar panels.

Model	Watts	Connector Type
Renogy RNG-100D-SS	100	MC4
Renogy Solar Panel 200 Watt 12 Volt	200	MC4
Bluetti SP120	120	MC4
Bluetti SP200	200	MC4
ECOFLOW EFSOLAR 160W	160	MC4
Champion 201246	120	MC4
Champion 201247	200	MC4

Any solar panel rated between 10-28V with MC4 or APP connectors can be used. The Power Station has a built in MPPT and inverter so there is no need to buy an external charge controller, inverter, or worry about connecting more than 440W of solar panels to reach 440W of input on cloudy days.

Using APP Port

(For Solar Panels with APP connector)

1. Connect the solar panel to the APP input port on the back of the Power Station. Be sure to connect the red lead to red side of port and black lead to black side of port.

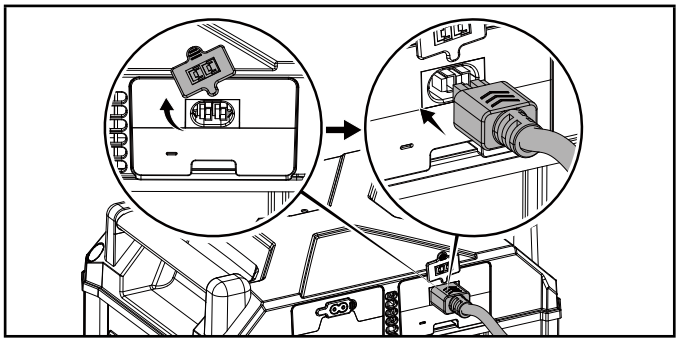

Any solar panel rated between 10-28V with MC4 or APP connectors can be used. The Power Station has a built in MPPT and inverter so there is no need to buy an external charge

controller, inverter, or worry about connecting more than 440W of solar panels to reach 440W of input on cloudy days.

OPERATION

Using the Power Station

1. Press and hold the power button for three seconds, until display illuminates.

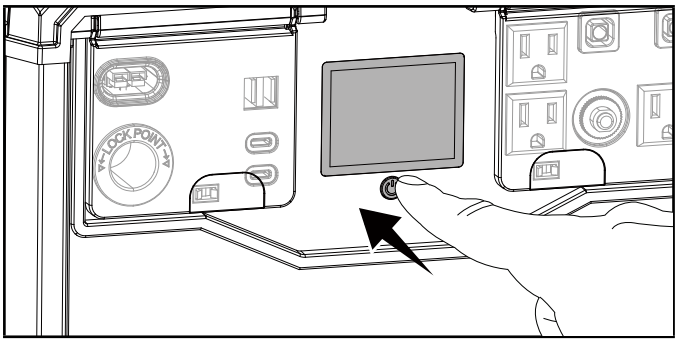

2. Press plastic cover to unlock and open to gain access to outlets.

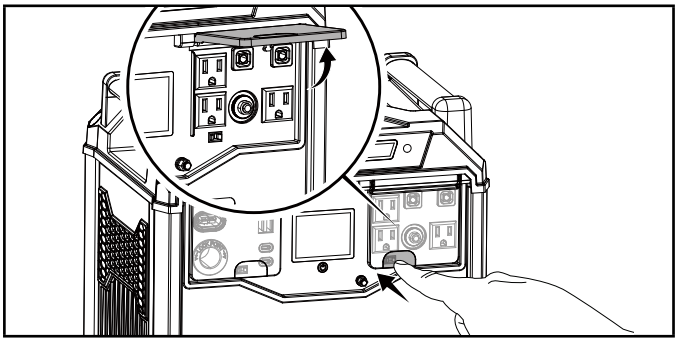

3. The DC Output side is always powered on. Press the power button once (1) to power AC outlets.

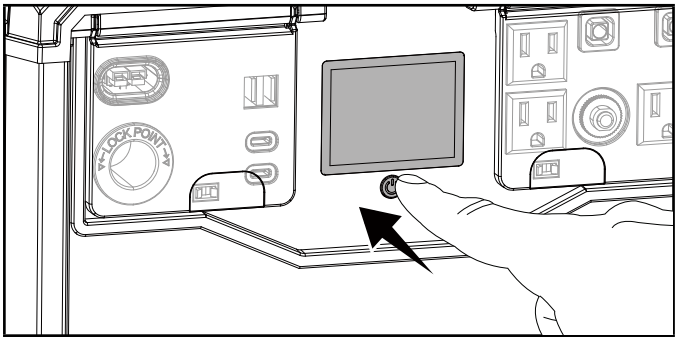

NOTICE

To protect sensitive electronics, as the Power Station's battery level drops below 30%, THD Shield is designed to shut off AC power output when the AC running watts are too high and it can no longer maintain a pure sine wave (<5% THD). The letters "THD" will appear in red. See *THD Shield (Total Harmonic Distortion)* section.

4. To turn THD Shield off, press THD Shield button 5x within three seconds.

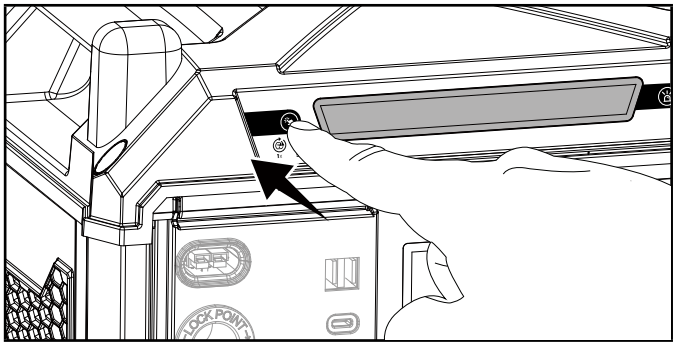

5. Plug in desired devices.

Standby Mode

The Power Station will remain in standby mode for 4 hours, then shut off if it does not supply at least 5 watts to an external device or appliance. It will not shut off if it is plugged in and charging. In standby mode, the display will shut off to preserve power, and the power button will slowly blink steady blue.

When the AC outlets are powered on, the Power Station consumes about the same amount of power as one light bulb.

LED Light

1. To turn on LED low power mode press LED light button one time. Press button one more time for high power mode.

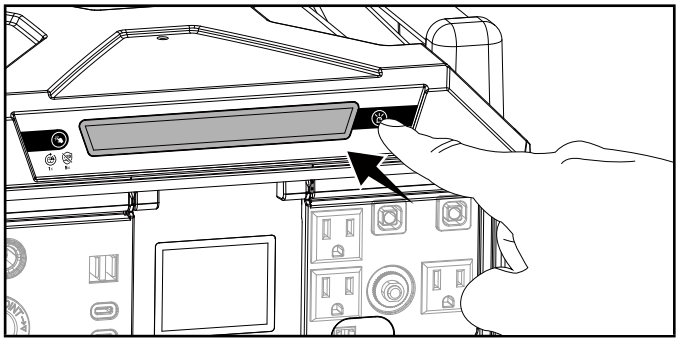

2. Press again to turn LED light off.

Connecting Electrical Loads

⚠ WARNING

Always remember to plug your appliances directly into the Power Station and do not connect any of the several Power Station “outputs” into any electrical outlet or connect to the circuit breaker panel in your home. Connecting a Power Station to your home’s electric utility company’s power lines, or to another power source, called ‘backfeeding’ is a dangerous practice that is illegal in many states and municipalities.

This action if done incorrectly could damage your Power Station, appliances and could cause serious injury or death to you or a utility worker when attempting to restore power during an outage occurrence in the neighborhood who may then unexpectedly encounter high voltage on the utility line and suffer a fatal shock.

Whether injuries occur or not, if installed incorrectly and not to applicable laws and codes, you may be subject to fines or the utility company may disconnect your home power should this practice be found in your home.

If the Power Station will be connected to a building electrical system, those connections must isolate the Power Station power from the utility power. You are responsible for ensuring your Power Station’s electricity does not backfeed into the electric utility power lines. These connections must comply with all applicable laws and codes – Consult your local utility company or a qualified electrician to properly install this connection.

Resetting the Output

In case of an overload or fault on the AC or DC outlets:

1. Unplug all devices.
2. (For AC output errors only) Check to see if Power Station’s circuit breaker is tripped. If tripped, push in to reset.
3. Press the reset button.

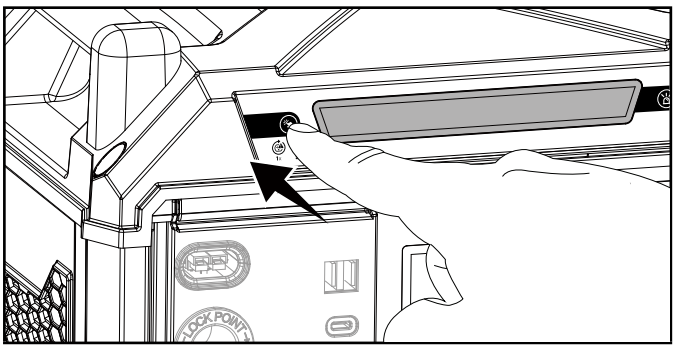

4. If overload is due to high THD, the AC outlet icon and “THD” will remain steady red. See *THD Shield (Total Harmonic Distortion)* section.

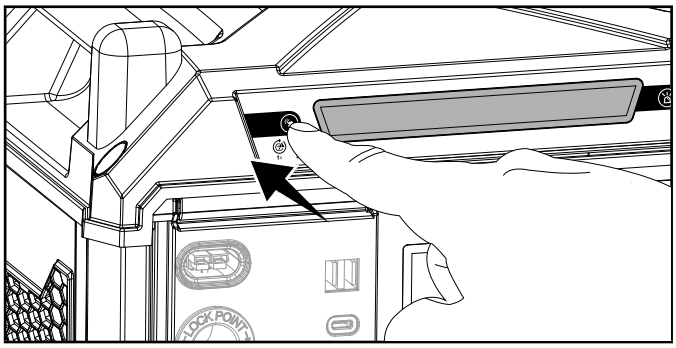

THD Shield (Total Harmonic Distortion)

NOTICE

12V DC and USB output will be available at all times, even if AC output is shut off for THD Shield.

To protect sensitive electronics, as the Power Station’s battery level drops below 30%, THD Shield is designed to shut off AC power output when the AC running watts are too high and it can no longer maintain a pure sine wave (<5% THD). The letters “THD” will appear in red.

When THD Shield is disabled, AC power output is not shut off when THD rises above 5%. The THD Shield disabled icon will flash blue and the letters “THD” will flash red, indicating THD is above 5%. This is comparable to the THD and power output of a standard portable generator and is safe for most electronic devices while still emitting zero emissions.

Some ways to avoid shutting off the AC output are; keep the Power Station charged; maintain charging during use; unplug high current draw AC appliances to lower your load when the battery falls to near 30% of charge capacity; turn off THD Shield.

The lower the AC running watts, the longer the Power Station will be able to maintain and continue outputting pure sine wave AC power.

To restore AC output after THD Shield shut off:

1. Charge the Power Station if possible.
2. Lower the AC running watts by unplugging one or more devices.
3. Press the overload reset button to clear the fault icon.

To turn THD Shield off:

1. Lower the AC running watts by unplugging one or more devices if possible.

2. Press the THD Shield button 5 times within three seconds. The THD Shield disabled icon will turn on.

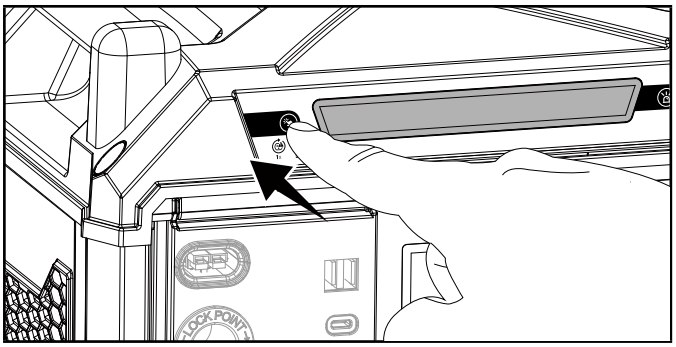

3. Monitor your devices for abnormal operation and disconnect as necessary.

Do Not Overload Power Station

Capacity

Follow these simple steps to calculate the running and starting watts necessary for your purposes:

1. Select the electrical devices you plan on running at the same time.
2. Total the running watts of these items. This is the amount of power you need to keep your items running.
3. Identify the highest starting wattage of all devices identified in step 1. Add this number to the number calculated in step 2. Starting wattage is the surge of power needed to start some electric driven equipment. Following the steps listed under "Power Management" will guarantee that only one device will be starting at a time.
4. The total running watts from step 2 is how many **watts** the Power Station will discharge during one **hour** of run time, **watt-hours (Wh)**.
   Divide the Power Station's capacity (Wh) by total running watts from step 2 to get the approximate available run time.
   Example:
   Step 2 total running watts: 800W
   100593 Capacity: 3276Wh
   3276Wh/800W = Approximately 4 hours of run time.
5. If the Power Station power output is cut off due to an overload or high THD condition, see *Resetting the Output* and *THD Shield (Total Harmonic Distortion)* sections.

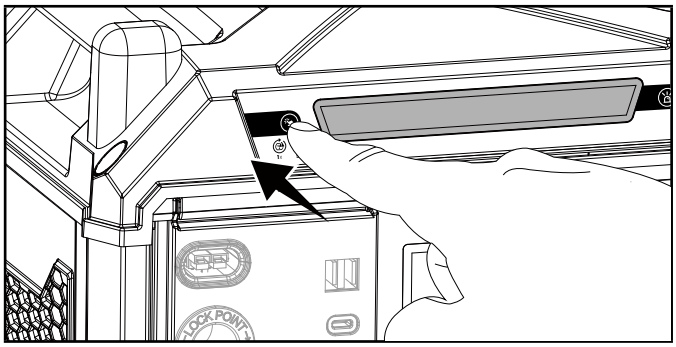

Power Management

Use the following formula to convert voltage and amperage to watts:

Volts × Amps = Watts

To prolong the life of your Power Station and attached devices, follow these steps to add electrical load:

1. Start the Power Station with no electrical load attached.
2. Make sure all circuit breakers are set to the run position.
3. Plug in and turn on the first item. It is best to attach the item with the largest load first.
4. Plug in and turn on the next items one by one.

NOTICE

Never exceed the specified capacity when adding loads to the Power Station.

Operation at High Altitude

The density or low pressure of air at higher altitudes is lower than at sea level.

The increase of higher altitudes causes the battery to ignite faster, while the mass loss, heat release rate and total heat release for batteries decrease at low pressure, thereby experiencing faster internal battery arcing, and greater energy consumption with the higher altitudes and thinner atmospheres.

Parallel Operation

Champion Power Station model 100593 is parallel ready and can be operated with another Champion inverter or Champion Power Station to increase the total available electrical output power.

Champion parallel kit model 201108 (optional equipment) is recommended for optimum parallel operation. For a complete list of compatible parallel kit models or to order a parallel kit, please call customer service at 1-877-338-0999 or visit www.championpowerequipment.com.

Detailed instructions for parallel kit installation and operation of the connected Power Stations are also provided in the parallel kit operator's manual.

Expandable Capacity

Champion Power Station model 100593 is capable of connecting up to ten 1638 Wh external battery packs, Champion Expansion Battery model 201107.

To order Champion Expansion Battery model 201107 to increase your Power Station's battery capacity and run time, please call customer service at 1-877-338-0999 or visit www.championpowerequipment.com.

Turning Off the Power Station

If the Power Station is being charged, it will not be able to be turned off. The internal fans will continue running periodically to ensure the unit does not overheat.

1. Turn off and disconnect all devices.
2. Close the plastic outlet covers.
3. Press and hold the power button for three seconds until display turns off.

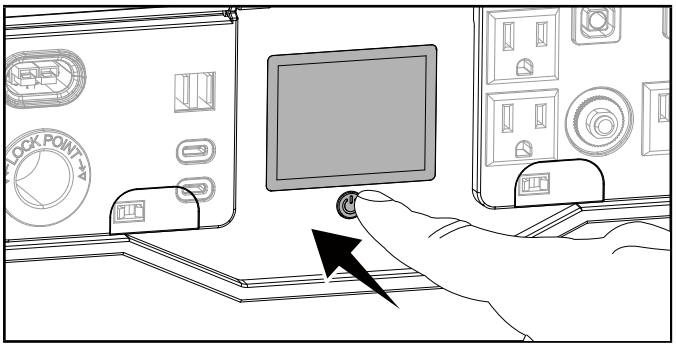

Moving the Power Station

1. With the help of another person, pick up the power station by the carrying handles as shown below.

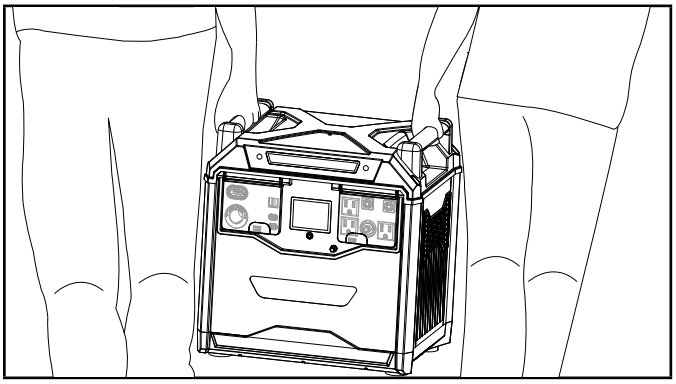

2. Move to desired location.

MAINTENANCE

Cleaning the Power Station

⚠ WARNING

DO NOT spray Power Station directly with water.

No user serviceable parts for maintenance required.

Water can enter the Power Station through the cooling slots and damage the Power Station electronics.

1. Use a damp cloth to clean exterior surfaces of the Power Station.
2. Use a soft bristle brush to remove dirt and debris.
3. Use an air compressor (25 PSI) to clear dirt and debris from the Power Station.
4. Inspect all air vents and cooling slots to ensure that they are clean and unobstructed.

STORAGE

- This Power Station is intended to be stored indoors and shall not be stored or left outdoors when not in use.
- Do not stack any items on top of the Power Station during storage.
- Store your Power Station in a cool, dry place between 32°F (0°C) and 104°F (40°C). The ideal storage temperature is 59°F (15°C).
- Do not store Power Station where temperatures may exceed 104°F (40°C) such as in direct sunlight, in a vehicle or metal buildings especially during the summer.
- Do not store the Power Station near sources of high heat or fire.
- Do not store the Power Station when battery level is at 20% or less state of charge (SOC). The ideal storage SOC is 40-60%.
- When storing the Power Station for periods of one month or longer, store the Power Station at an SOC of about 60%. Every three months, discharge the Power Station to 40% and recharge back to 60% to extend the battery life.
- Lithium batteries must be charged regularly to perform well. The Power Station must be fully charged by you at least once every 6 months (180 days).

SPECIFICATIONS

Power Station Specifications

Power Station Model	100593
AC Running Watts	1600
AC Starting Watts	3200
AC Volts	120
AC Amps @ 120V (Running)	13.3
DC Volts	See outlet specifications
DC Amps	See outlet specifications
Output Frequency	60 Hz
Phase	Single
Grounding Type	Neutral Floating
Weight	63.3 lb. (28.7 kg)
Length	13.9 in. (35.3 cm)
Width	10.8 in. (27.5 cm)
Height	15.7 in. (39.8 cm)

Battery Specifications

Chemistry	Lithium ion NMC
Pack Rated Output Voltage	46.8
Pack Max. Output Voltage	55
Pack Capacity	3276 Wh
Single Cell Equivalent Capacity	Up to 910 Ah at 3.6V

AC Charger Specifications

Output Watts	440
Input Voltage	120
Output Voltage	55 DC
Max. Input Amps	4.5
Output Amps	8
Input Frequency	60

DC Charger Specifications

Output Watts	440
Input Voltage	10-28
Output Voltage	55
Max. Input Amps	25
Output Amps	8

Temperature Specifications

Charging Temperature Range (°F/°C)	32 to 113/0 to 45
Discharging Temperature Range (°F/°C)	5 to 104/-15 to 40

TROUBLESHOOTING

Problem	Cause	Solution
Power Station will not turn on.	Battery is not charged	Charge battery.
	Did not hold power button long enough	Hold for 3 full seconds until display turns on.
	Battery is faulty	Call Champion Support.
No power output. Warning icons or LED light flashing.	DC Outlets overloaded	Check display for flashing red 12V or USB warning light. Press Overload Reset button to restore power to outlets.
	AC outlets overloaded	Check display for flashing red 120V warning light. Check if AC Overload button flashing red. Check if circuit breaker tripped. Unplug devices from AC outlets. Press circuit breaker if tripped. Press Overload Reset button if warning light is flashing red. If power still not restored, turn unit OFF for 1 minute then restart.
	Device is faulty	Check all plugged in devices for frayed or faulty wires. Never run any equipment in wet or humid environments
	Device not compatible with USB outlet.	Check your devices' charging capability and try different USB outlet.
	Unit is too hot	Check display for flashing red High Temperature warning light. Turn the unit off, place it in the shade or a cooler area and let it cool down. Check that the unit is not overloaded.
	Unit is too cold	Check display for flashing red Low Temperature warning light. Turn the unit off and bring it indoors. Allow the unit to warm up.
	Battery fault	Check display for flashing red triangular Warning light or constant flashing LED light. Turn unit off for 5 minutes and restart. Call customer service if warning light does not go away.
Unit will not charge through wall.	Home circuit breaker tripped	Check your home's circuit breaker and reset if necessary.
	Faulty charging cable	Check that your charging cable is not frayed or faulty. Never charge your equipment in wet or humid conditions
Unit will not charge through solar.	Solar panels are not within spec	Check that your solar panels are rated between 10-28V.
	Solar panels improperly connected	When connecting multiple solar panels, only use provided Easy Connect DC Solar Charge Harness and appropriately rated extensions. When plugging directly into APP port, only use one solar panel rated between 10-28V.
	Solar panels not receiving enough sunlight	Check that your solar panels are pointed directly at the sun and there is ample sunlight. Read your solar panel's instruction manual for proper placement and instructions.

Problem	Cause	Solution
Unit not charging at Solar Panel rated wattage.	Charging wattage depends on environmental conditions and panel efficiency.	Adjust your solar panels to face the sun as best as possible throughout the day to achieve maximum charging efficiency. It may be necessary to connect more than any combination of 440W of solar panels to reach the full 440W of charging power. For example, on a cloudy day, three 150W (450W total) rated solar panels may only produce about 250-350W of charging power. It may be necessary, and will not harm your Power Station to add more solar panels to the harness until you reach 440W of charging power.
	Unit is nearing 100% battery level and is slowing down to a safer charging rate.	The charging power and rate is reduced as the battery level gets closer to 100% to safely charge the internal battery.
THD Shield (Total Harmonic Distortion) above 5%	AC power output too high	Charge Power Station. Unplug 1 or more AC devices. See *THD Shield (Total Harmonic Distortion)* section to turn off THD Shield.
	Battery level too low	Charge Power Station. Unplug 1 or more AC devices. See *THD Shield (Total Harmonic Distortion)* section to turn off THD Shield.
	THD too high for sensitive electronic	THD Shield disabled. Charge Power Station. Unplug 1 or more AC devices. See *THD Shield (Total Harmonic Distortion)* section for more information.

For other issues and technical support:

Technical Support Team
Toll Free 1-877-338-0999
support@championpowerequipment.com

WARRANTY*

CHAMPION POWER EQUIPMENT

3 YEAR or 1000 CYCLE LIMITED WARRANTY

Warranty Qualifications

To register your product for warranty and FREE lifetime call center technical support please visit:
https://www.championpowerequipment.com/register

To complete registration you will need to include a copy of the purchase receipt as proof of original purchase. Proof of purchase is required for warranty service. Please register within ten (10) days from date of purchase.

Repair/Replacement Warranty

CPE warrants to the original purchaser that the components will be free of defects in material and workmanship for a period of three (3) years or 1000 cycles (parts and labor), whichever occurs first, from the original date of purchase and 90 days (parts and labor) for commercial and industrial use. Transportation charges on product submitted for repair or replacement under this warranty are the sole responsibility of the purchaser. This warranty only applies to the original purchaser and is not transferable.

Do Not Return The Unit To The Place Of Purchase

Contact CPE's Technical Service and CPE will troubleshoot any issue via phone or e-mail. If the problem is not corrected by this method, CPE will, at its option, authorize evaluation, repair or replacement of the defective part or component at a CPE Service Center. Please keep it for future reference. Repairs or replacements without prior authorization, or at an unauthorized repair facility, will not be covered by this warranty.

Warranty Exclusions

This warranty does not cover the following repairs and equipment:

Normal Wear

Products with lithium batteries should be charged regularly to perform well. The Power Station must be fully charged by you at least once every 6 months (180 days). This warranty does not cover repair when normal use has exhausted the life of a part, like the batteries, or the equipment.

Installation, Use and Maintenance

This warranty will not apply to parts and/or labor if the product is deemed to have been misused, neglected, involved in an accident, abused, loaded beyond the product's limits, modified, installed improperly or connected incorrectly to any electrical component. Normal maintenance is not covered by this warranty and is not required to be performed at a facility or by a person authorized by CPE.

Other Exclusions

This warranty excludes:

- Items purchased from unauthorized resellers.
- Any defects or damages caused by exposure to excessive heat, cold, corrosive or conductive fluids, liquids such as water, seawater, industrial chemicals, bleach or bleach containing products or other external causes.
- Warranty claims on items taken outside the original country of purchase
- Cosmetic defects on plastic, labels, etc.
- Failures due to acts of God and other force majeure events beyond the manufacturer's control.
- Problems caused by parts that are not original Champion Power Equipment parts.
- Any battery cell or product containing a battery cell unless the battery cell has been fully charged after purchase of the product and at least once every 6 months (180 days) thereafter.

Limits of Implied Warranty and Consequential Damage

Champion Power Equipment disclaims any obligation to cover any loss of time, use of this product, freight, or any incidental or consequential claim by anyone from using this product.

A unit provided as an exchange will be subject to the warranty of the original unit. The length of the warranty governing the exchanged unit will remain calculated by reference to the purchase date of the original unit.

This warranty gives you certain legal rights which may change from state to state or province to province. Your state or province may also have other rights you may be entitled to that are not listed within this warranty.

Contact Information

Address

Champion Power Equipment, Inc.
6370 S Pioneer Way, Unit 101
Las Vegas, NV 89113 USA
www.championpowerequipment.com

Customer Service

Toll Free: 1-877-338-0999
support@championpowerequipment.com
Fax no.: 1-562-236-9429