Champion Power Equipment, Inc.

MODEL #100729

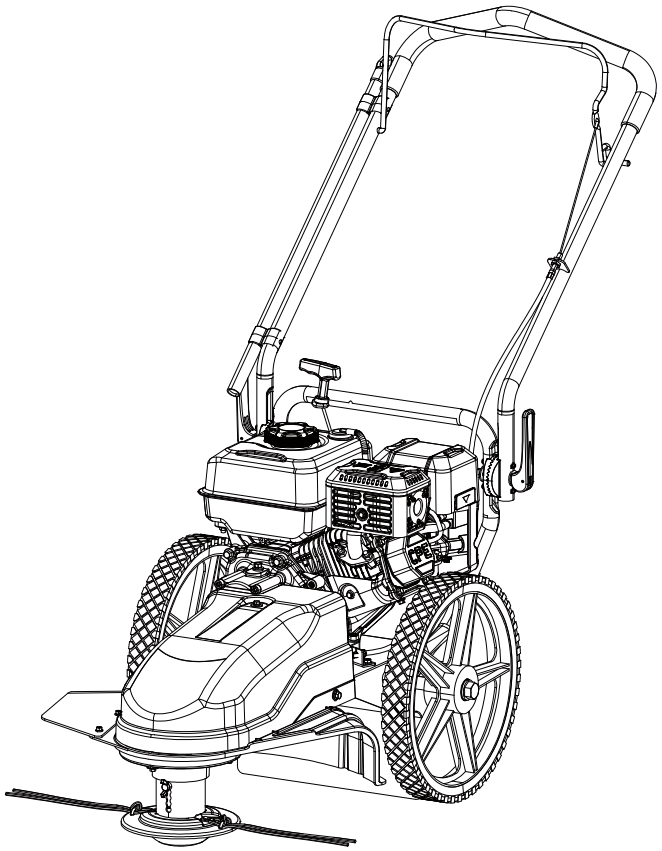

PARTS INFORMATION

24-INCH (61 CM) WALK BEHIND STRING TRIMMER

SERIAL NUMBER RANGE: ALL

To order replacement parts please visit:
shop.championpowerequipment.com
or call **1-877-338-0999.**

REV 20250923

TABLE OF CONTENTS

String Trimmer Parts Diagram A 3
String Trimmer Parts List A 4
String Trimmer Parts Diagram B 5
String Trimmer Parts List B 6
String Trimmer Parts Diagram C 7
String Trimmer Parts List C 8
Engine Parts Diagram 9
Engine Parts List 10

STRING TRIMMER PARTS DIAGRAM A

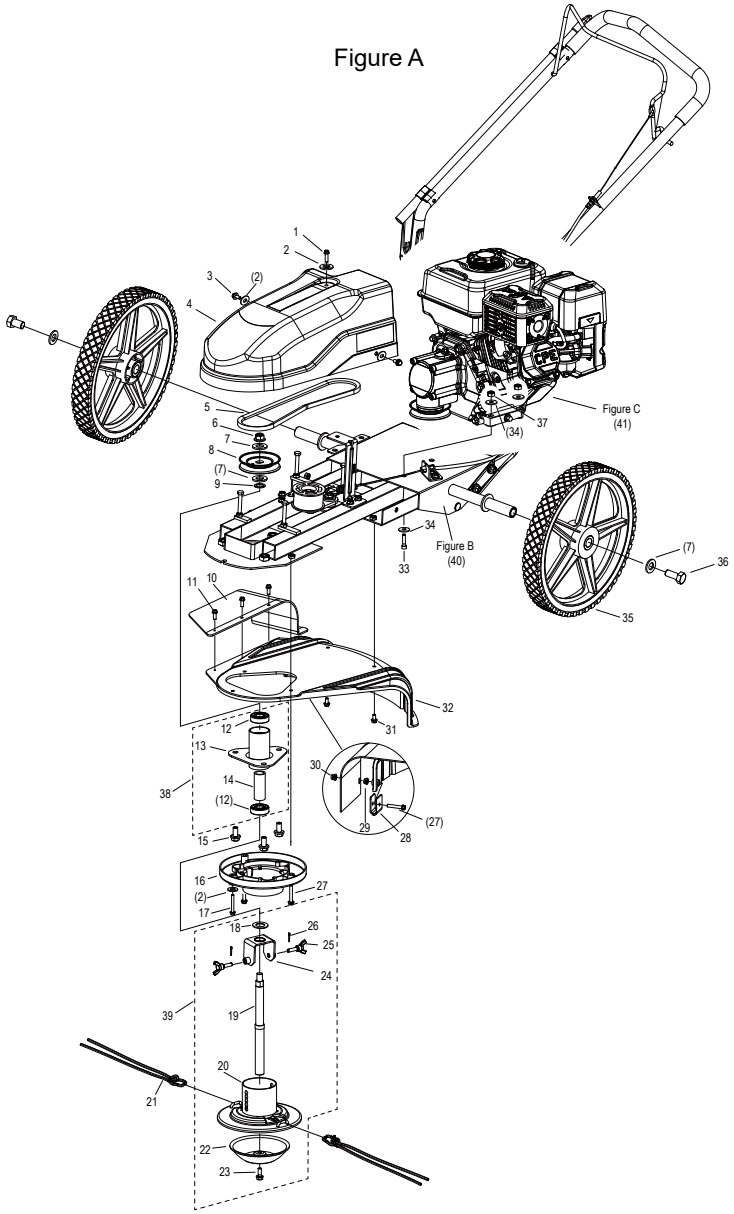

STRING TRIMMER PARTS LIST A

#	Part Number	Description	Qty.
1	B01310602067	Flange Bolt M6 x 20, GB5789-86	1
2	B07020006047	Large Flat Gasket Ø6, GB/T96.2-02	4
3	B01310601467	Flange Bolt M6 x 14, GB5789-86	2
4	30100810701000	Belt Cover	1
5	30110810702000	Belt	1
6	B04421212546	Flange Lock Nut M12 x 1.25, GB6187.2-2000	1
7	30500810201000	Flat Washer, Ø16.8 x Ø32 x 3	4
8	30140810201000	Pulley, Cutting Head	1
9	30110810201000	Washer, Flat Ø16.8xØ24x1.5	1
10	30340810201000	Flap, Debris	1
11	32040810105050	Hex Flange Self Tapping Screw	3
12	B12016020302	Bearing 6203-2RS, GB/T276-13	2
13	25020811001090	Shaft Fixing Seat, Cutting Head	1
14	35020811001000	Bearing Bushing	1
15	B01311002066	Flange Bolt M10 x 20, GB5789-86	3
16	30150810701000	Shield, Shaft Fixing Seat	1
17	B01310504066	Flange Bolt M5 x 40, GB5789-86	1
18	35040811001000	Washer, Flat Ø17.5xØ30x1.5	1
19	35010811001000	Shaft, Cutting Head	1
20	20040810702090	Cutter Head & Wrap Assy	1
21	30150870100000	Line, Trimmer I	2
22	30840810101090	Height Guide	1
23	B370802085	Bolt, M8 x 20, Q180-2012	1
24	20050810702000	Bracket Assembly	1
25	25010811001001	Butterfly Bolt	2
26	B090016A1018	Cotter Pin, GB/T91-2000	2
27	B01310603566	Flange Bolt M6 x 35,GB5789-86	3
28	30320810201000	Blade	1
29	B04280600046	Flange Nut M6, GB6177.1-2000	1
30	B04410600046	Flange Lock Nut M6, GB6187.1-2000	1

#	Part Number	Description	Qty.
31	B01310601466	Flange Bolt M6 x 14, GB5789-86	2
32	30330810201000	Shield, Trimmer	1
33	B02040803566	Hexagon Socket Screw M8 x 35, GB/T70.1-08	4
34	B07010008046	Flat Washer Ø8, GB/T95-02	8
35	20160810401800	Wheel & Tire	2
36	B01241602566	Hexagon Head Bolt M16 x 25, GB/T5780-2000	2
37	B04340800046	Nylon Lock Nut M8, GB/T6182-2010	4
38	25030811001000	Jackshaft Bracket Assy	1
39	20130810702000	Cutting Head Assembly	1
40	Figure B	Frame & Hnslw Assy, See Figure B	1
41	Figure C	Engine & Gear Box Assy, See Figure C	1

STRING TRIMMER PARTS DIAGRAM B

Figure B

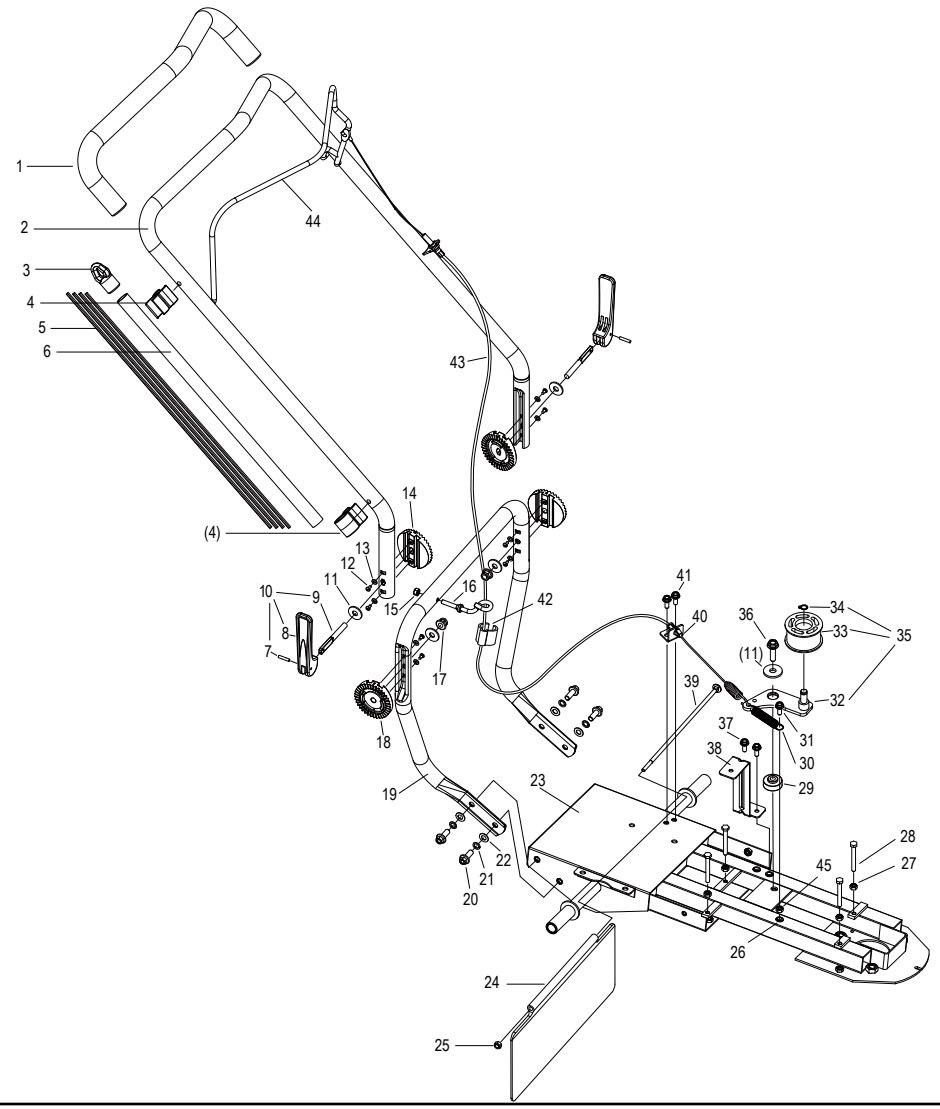

STRING TRIMMER PARTS LIST B

#	Part Number	Description	Qty.
1	30590851000000	Foam Tubing	1
2	30010810702090	Upper Handle	1
3	30630870100000	Tube Cap,Trimmer Line	1
4	30600870100000	Pipe Clamp 1	2
5	30150870100000	Line, Trimmer I	4
6	30120810702000	Line Storage Tube	1
7	B09030402018	Cylindrical Pin Ø4 x 20, GB/T119.1-2000	2
8	30600851000350	Clamp Locking Handle	2
9	30630851000020	Bolt, Handle Sprocket	2
10	20140851000350	Clamp Locking Handle Device	1
11	B07020008046	Large Flat Gasket Ø8, GB/T96.2-02	5
12	B050035010C6	Self Tapping Screw ST3.5 x 10, GB845-2017	8
13	B07010004048	Flat Washer Ø4, GB/T95-02	8
14	30620851000000	Sprocket 2	2
15	30120820103000	Nylon Lock Nut	1
16	30440810101000	Rope Hook	1
17	B04340800046	Nylon lock nut M8, GB/T6182-2010	2
18	30610851000000	Sprocket 1	2
19	30100810702090	Lower Handle	1
20	B01310802066	Flange bolt M8 x 20, GB5789-86	4
21	B07000008046	Spring Washer Ø8, GB93-87	4
22	B07010008046	Flat Washer Ø8, GB/T95-02	4
23	20010810702090	Frame Welding Components	1
24	30090810201000	Shield, Trailing	1
25	B04340600047	Nylon Lock Nut M6, GB/T6182-2010	1
26	B04480600045	Flat Head Rivet Nut M6, GB/T17880.1-99	3
27	B04200600046	Hexagonal Nut M6, GB/T6170-2015	4
28	B01240605066	Hexagon Head Bolt M6 x 50, GB/T5780-2000	4
29	30180810701000	Tensioning Sleeve	1
30	30520711500020	Resting Spring	1

#	Part Number	Description	Qty.
31	B01310602066	Flange bolt M6 x 20, GB5789-86	1
32	20080710201000	Bracket, Idler Assy	1
33	20060710201000	Tensioner	1
34	B08080001011	Shaft retaining ring Ø10, GB894.1-86	1
35	20780710504000	Tensioner Assembly	1
36	B01310803066	Flange Bolt M8 x 30, GB5789-86	1
37	B01310601666	Flange Bolt M6 x 16, GB5789-86	2
38	20080810701090	Belt Cover Bracket Assembly	1
39	30020810201001	Connecting Bolt M6 x 230	1
40	30130810702090	Snap board, Clutch Cable	1
41	B01310601266	Flange Bolt M6 x 12, GB5789-86	2
42	3028022A711800	Cable clip	1
43	20120810702000	Clutch Cable	1
44	20080810702350	Control Lever	1
45	B04280600046	Flange Nut M6, GB6177.1-2000	1

STRING TRIMMER PARTS DIAGRAM C

Figure C

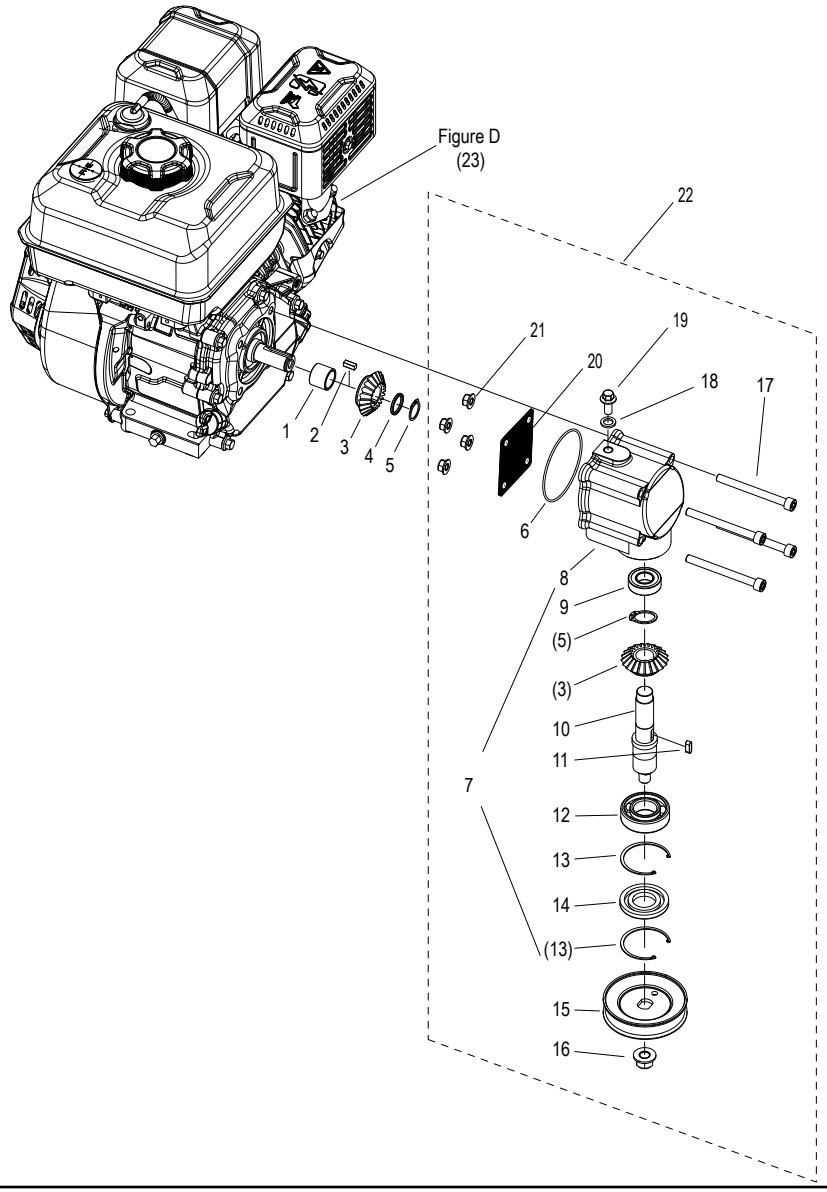

STRING TRIMMER PARTS LIST C

#	Part Number	Description	Qty.
1	30010810701000	Sleeve	1
2	30040810701000	Flat Key 4.78 × 5 × 14.5	1
3	30030810701000	Bevel Gear	2
4	30020810701000	Shaft Sleeve	1
5	B08080001911	Shaft Circlip Ø19	2
6	30090810701000	O Ring Ø78 × Ø2	1
7	20020810701000	Gear Box Assembly	1
8	30080810701000	Gear Box	1
9	B12016000301	Bearing 6003RS	1
10	30050810701000	Shaft, Gear Box	1
11	30060810701000	Flat Key	1
12	B12016020500	Bearing 6205	1
13	B08060005211	Circlip 52	2
14	30070810701000	Oil Seal 25 x 52 x 7	1
15	30140810201000	Pulley, Cutting Head	1
16	B04421212546	Flange Lock Nut M12 x 1.25	1
17	B02040808566	Hexagon Socket Screw	4
18	31070124001001	Gasket Ø10.3*Ø15.9*1.2	1
19	31060116001000	Oil drain Screw	1
20	905070000832	Gear Box Cover, Only For Transportation	1
21	B04280800046	Flange Nut, Only For Transportation	4
22	20090810701000	Gearbox and Pulley Assembly	1
23	R210P-E00DYFT	212 cc, EPA Engine, See Figure D	1

ENGINE PARTS DIAGRAM

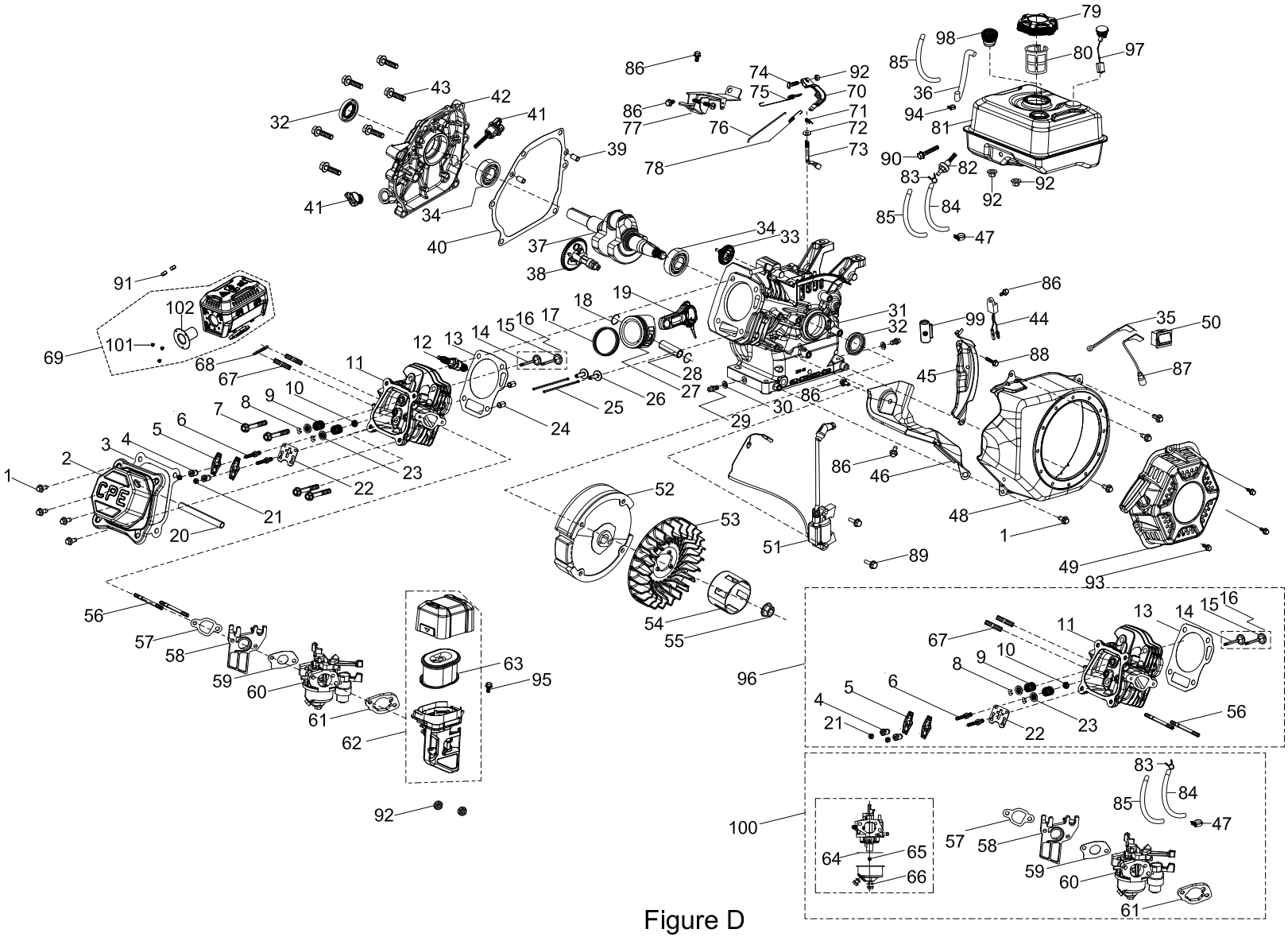

Figure D

ENGINE PARTS LIST

#	Part Number	Description	Qty.
1	90001-000018	Hex Flange Bolt, M6 x 12, White Zn	8
2	12410-000011	Cylinder Head Cover Assy, White Zn	1
3	12004-000013	Cylinder Head Cover Gasket	1
4	14314-000001	Valve Adjusting Nut	2
5	14311-000001	Valve Rocker	2
6	14313-000001	Valve Adjusting Bolt	2
7	12003-000001	Cylinder Head Bolt, M8 x 60, White Zn	4
8	12109-000004	Valve Lock Clamp, Ø4.985 x Ø8.475	4
9	12103-000010	Valve Spring, Ø18.3 x 34.5	2
10	12101-000006	Seal Guide, Ø4.3 x 7.7	1
11	12140-000019	Cylinder Head Assy	1
12	30010-000001	Spark Plug, F6RTC	1
13	12131-000015	Cylinder Head Gasket	1
14	12121-000013	Exhaust Valve	1
15	12111-000010	Inlet Valve	1
16	12110-000013	Valve Set	1
17	13200-000004	Piston Ring	1
18	13122-000001	Piston Pin Clip	2
19	13010-000007	Connecting Rod, Ø30.2 x Ø18 x 84	1
20	17004-000003	Tube, Breather, Ø8 x Ø12 x 95	1
21	14312-000001	Valve Lock Nut	2
22	14090-000001	Lifter Stopper Plate Assy, White Zn	1
23	12112-000008	Valve Spring Retainer	2
24	90502-000007	Pin, 11 x 14	2
25	14071-000004	Valve Lifter, Ø5 x Ø4 x 132	2
26	14081-000002	Valve Tappet, Ø23.6 x Ø8 x 31 x SR2.5	2
27	13111-000007	Piston	1
28	13121-000001	Piston Pin, Ø18 x Ø14 x 54	1
29	11007-000001	Drain Plug Bolt, M10 x1.25 x15, White Zn	2
30	90408-000019	Washer, Ø10 x Ø15.8 x 1.5	2

#	Part Number	Description	Qty.
31	11310-000041	Crankcase Assy	1
32	90682-000010	Oil Seal, Ø25 x Ø41.25 x 6	2
33	16400-000001	Governor Gear Assy	1
34	90547-000006	Bearing, 6205	2
35	35541-000009	Stop Engine Connecting Wire	1
36	16805-000018	Rubber Hose, Air Cleaner, Ø4.5 x Ø8.5 x 270	1
37	13300-000047	Crankshaft Assy	1
38	14200-000015	Camshaft Assy	1
39	90502-000005	Pin, 9 x 12	2
40	11001-000008	Crankcase Gasket	1
41	15010-000012	Oil Dipstick Assy	2
42	11411-000031	Crankcase Cover	1
43	90001-000047	Hex Flange Bolt, M8 x 32, White Zn	6
44	37050-000001	Oil Protector, White Zn	1
45	19340-000012	Lower Shield, White Zn	1
46	19304-000001	Cylinder Body Shroud	1
47	90685-000012	Clamp, Ø8 x 0.6 x 7, Dacromet	1
48	28110-000031	Shroud	1
49	28200-000007	Recoil Starter Assy	1
50	35540-000004	Stop Engine Switch Assy	1
51	30400-000014	Ignition Coil	1
52	13510-000014	Flywheel Assy	1
53	19352-000012	Cooling Fan, Engine	1
54	28002-000004	Starter Pulley, White Zn	1
55	13501-000001	Flywheel Nut, M14 x 1.5, White Zn	1
56	90204-000015	Stud, M6 x 115, Blk Zn	2
57	16002-000001	Carburetor Insulator Gasket	1
58	16003-000001	Carburetor Insulator Plate	1
59	16001-000001	Carburetor Gasket	1
60	16100-000016	Carburetor Assy	1

ENGINE PARTS LIST

#	Part Number	Description	Qty.
61	17001-000002	Air Cleaner Gasket	1
62	17100-000005	Air Cleaner	1
63	17150-000004	Element, Air Cleaner	1
64	16112-000001	Seal Ring, Float, Ø48.5 x Ø51.5	1
65	16161-000026	Main Jet(76#), Standard	1
	16161-000024	Main Jet(74#), Altitude 3000-6000 Feet	/
	16161-000022	Main Jet(72#), Altitude 6000-8000 Feet	/
66	90681-000004	Seal Ring	1
67	90203-000001	Stud, M8 x 34, Blk Zn	2
68	18001-000007	Exhaust Gasket	1
69	18100-000048	Muffler Assy	1
70	16070-000001	Governor Support Assy, White Zn	1
71	90501-000005	Pin, White Zn	1
72	90408-000020	Washer, Ø6.2 x Ø15 x 0.6	1
73	16061-000001	Governor Arm	1
74	16072-000001	Governor Support Bolt, M6 x 21, White Zn	1
75	16063-000017	Spring, Governor, Ø6 x Ø0.8 x 120, White Zn	1
76	16062-000001	Governor Rod, Ø2 x 141.8, White Zn	1
77	16520-000003	Throttle Control Assy, White Zn	1
78	16012-000002	Throttle Valve Returning Spring, Ø5.3 x Ø0.35 x 90	1
79	16730-000022	Fuel Tank Cap	1
80	16652-000012	Fuel Strainer	1
81	16620-000043	Fuel Tank, 3.1L	1
82	16680-000003	Fuel Tank Oil Outlet Assy	1
83	90740-000004	Clamp, Ø1	1
84	90686-000025	Tube, Ø4.5 x Ø8.5 x 160	1
85	30431-000016	Rubber Jacket, Ø9.5 x Ø11 x 90, Blk	2
86	90001-000015	Hex Flange Bolt, M6 x 10, White Zn	5
87	35555-000004	Switch Connector Grounding Wire	1
88	90001-000022	Hex Flange Bolt, M6 x 16, White Zn	1
89	90001-000026	Hex Flange Bolt, M6 x 25, White Zn	2

#	Part Number	Description	Qty.
90	90001-000030	Hex Flange Bolt, M6 x 30, White Zn	1
91	90303-000007	Flange Nut, M8, Dacromet	2
92	90305-000008	Hex Flange Nut, M6, White Zn	5
93	90001-000014	Hex Flange Bolt, M6 x 8, Blk Zn	3
94	90685-000013	Clamp, Ø8.5 x 0.6 x 8, Dacromet	1
95	90007-000017	Hex Flange Bolt, M6 x 30, White Zn	1
96	96101-Z120410-0030	Cylinder Head Assy	1
97	37200-000016	Fuel Gauge	1
98	15150-000005	Valve, One Way	1
99	90684-000002	Clip, Ø20 x 43	1
100	96105-Z16100-0035	Carburetor Assy	1
101	90107-000007	Screw, ST4.2 x 8.5, White Zn	3
102	18250-000009	Spark Arrestor	1