OPERATOR'S MANUAL

MODEL #201492
6250W PORTABLE GENERATOR

ACTIVATE YOUR WARRANTY

by registering your product:
championpowerequipment.com

SERIAL NO.

TAKE IT OUTSIDE™
TAKEYOURGENERATOROUTSIDE.COM

1·877·338·0999
or visit **championpowerequipment.com**

SAVE THESE INSTRUCTIONS. This manual contains important safety precautions which should be read and understood before operating the product. Failure to do so could result in serious injury. This manual should remain with the product.

Specifications, descriptions and illustrations in this manual are as accurate as known at the time of publication, but are subject to change without notice.

This product meets the requirements of the PGMA (Portable Generator Manufacturers' Association) standard ANSI/PGMA G300-2023 (Safety and Performance of Portable Generators).

Covered by one or more of the following U.S. Patent Numbers: 10,221,780 / 10,393,034 / 10,598,101 / 10,697,398 / 10,862,414 / 11,008,958 / 11,143,120 / 11,143,145 / 11,306,667 / 11,492,985 / 11,530,654 / 11,761,390 / 11,840,970 / 11,905,895 / 11,905,896 and other U.S. and foreign patents pending.

5245-M-OP | REV 20260130 | EN

TAKE IT OUTSIDE™

CARBON MONOXIDE KILLS

CARBON MONOXIDE SAFETY: THE BIG PICTURE

Taking your generator outside is the only safe way to use it. It is absolutely mandatory for keeping your family safe from carbon monoxide. There are other things to know about this colorless, odorless threat, and also potential electrical hazards. By educating yourself about all risks, you'll be better prepared to protect your family and others.

ALWAYS READ THE OPERATOR'S MANUAL FIRST

KNOW THE SYMPTOMS

- Headache
- Nausea
- Shortness of breath
- Dizziness
- Fatigue

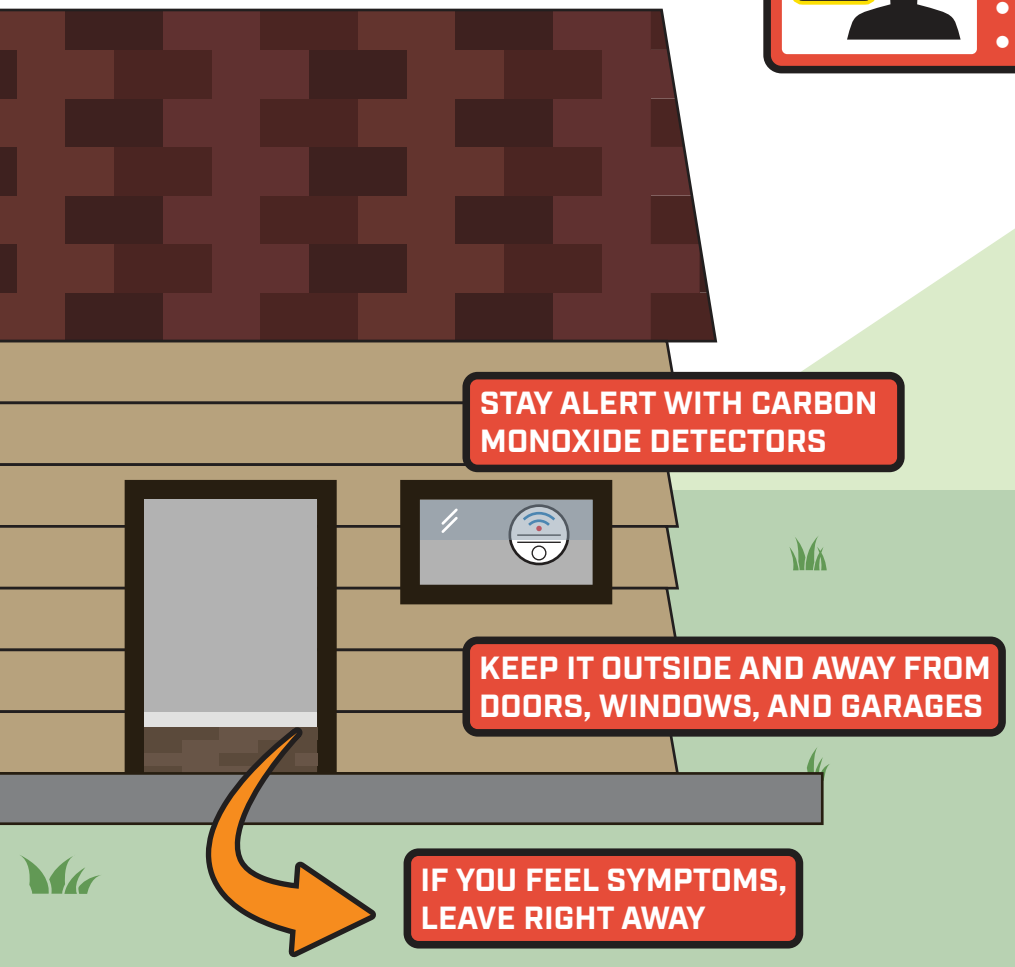

POINT FUMES AWAY FROM NEARBY PEOPLE

www.TakeYourGeneratorOutside.com

PGMA Portable Generator Manufacturers' Association

TABLE OF CONTENTS

Introduction **4**

Safety Definitions **4**

Important Safety Instructions **5**

Fuel Safety 7
Safety and Dataplate Labels 9
Safety Symbols 10
Operation Symbols 11
Quick Start Label Symbols 12

Controls and Features **13**

Generator 13
Control Panel 14
Intelligauge with CO Shield® 15
Parts Included 16
Tools Needed 16

Assembly **17**

Unpacking 17
Install the Wheel Kit 17
Add Engine Oil 17
Add Fuel 18
Grounding 19

Operation **20**

CO Shield® - Carbon Monoxide (CO) Detection and Auto-shutoff System 20
Generator Location 21
Surge Protection 22
Starting the Engine 22
Connecting Electrical Loads 23
Do Not Overload Generator 23
GFCI 24
Stopping the Engine 24
Moving the Generator 25
Operation at High Altitude 25

Maintenance **26**

Cleaning the Generator 26
Changing the Engine Oil 26
Cleaning and Adjusting the Spark Plug 26
Cleaning the Air Filter 27
Cleaning the Spark Arrestor 27
Adjusting the Governor 27
Maintenance Schedule 27

Storage **28**

Short Term Storage (up to 30 days) 28
Mid Term Storage (30 days – 1 year) 28
Long Term Storage (over 1 year) 29
Removing from Storage 29

Specifications **30**

Generator Specifications 30
Engine Specifications 30
Oil Specifications 30
Fuel Specifications 30
Temperature Specifications 30

Troubleshooting **31**

FOR PARTS BREAKDOWN

Search by model number at
championpowerequipment.com

INTRODUCTION

Congratulations on your purchase of a Champion Power Equipment (CPE) product. CPE designs, builds, and supports all of our products to strict specifications and guidelines. With proper product knowledge, safe use, and regular maintenance, this product should bring years of satisfying service.

Every effort has been made to ensure the accuracy and completeness of the information in this manual at the time of publication, and we reserve the right to change, alter and/or improve the product and this document at any time without prior notice.

CPE highly values how our products are designed, manufactured, operated, and serviced as well as providing safety to the operator and those around the generator. Therefore, it is IMPORTANT to review this product manual and other product materials thoroughly and be fully aware and knowledgeable of the assembly, operation, dangers and maintenance of the product before use. Fully familiarize yourself, and make sure others who plan on operating the product fully familiarize themselves too, with the proper safety and operation procedures before each use. Please always exercise common sense and always err on the side of caution when operating the product to ensure no accident, property damage, or injury occurs. We want you to continue to use and be satisfied with your CPE product for years to come.

When contacting CPE about parts and/or service, you will need to supply the complete model and serial numbers of your product. Transcribe the information found on your product's nameplate label to the table below

CPE TECHNICAL SUPPORT TEAM
1-877-338-0999
MODEL NUMBER
201492
SERIAL NUMBER
DATE OF PURCHASE
PURCHASE LOCATION

SAFETY DEFINITIONS

The purpose of safety symbols is to attract your attention to possible dangers. The safety symbols, and their explanations, deserve your careful attention and understanding. The safety warnings do not by themselves eliminate any danger. The instructions or warnings they give are not substitutes for proper accident prevention measures.

⚠ DANGER

DANGER indicates a hazardous situation which, if not avoided, will result in death or serious injury.

⚠ WARNING

WARNING indicates a hazardous situation which, if not avoided, could result in death or serious injury.

⚠ CAUTION

CAUTION indicates a hazardous situation which, if not avoided, could result in minor or moderate injury.

NOTICE

NOTICE indicates information considered important, but not hazard-related (e.g., messages relating to property damage).

IMPORTANT SAFETY INSTRUCTIONS

⚠ WARNING

Cancer and Reproductive Harm – www.P65Warnings.ca.gov

⚠ DANGER

Generator exhaust contains carbon monoxide, a colorless, odorless, poisonous gas. Breathing carbon monoxide will cause nausea, dizziness, fainting or death. If you start to feel dizzy or weak, get to fresh air immediately.

OPERATE GENERATOR OUTDOORS ONLY IN A WELL VENTILATED AREA AND POINT EXHAUST AWAY.

DO NOT operate the generator inside any building, including garages, basements, crawlspaces and sheds, enclosure or compartment, including the generator compartment of a recreational vehicle.

DO NOT allow exhaust fumes to enter a confined area through windows, doors, vents or other openings.

⚠ DANGER

Using a generator indoors **CAN KILL YOU IN MINUTES**. Generator exhaust contains carbon monoxide. This is a poison you cannot see or smell.

NEVER use inside a home or garage, **EVEN IF** doors and windows are open.

ONLY use **OUTSIDE** and far away from windows, doors, and vents.

⚠ WARNING

Always install a battery-operated Carbon Monoxide (CO) detector on each level of any building or home dwelling adjacent to the generator location following the Carbon Monoxide (CO) detector manufacturer's installation instructions.

In many U.S. States and Canadian Provinces, it is required by law to have a Carbon Monoxide (CO) detector installed on each level of an occupied building or home dwelling.

The Carbon Monoxide (CO) detector is a device that detects elevated levels of poisonous Carbon Monoxide (CO) gas and will alert the occupants by flashing a visual light indicator and an audible alarm.

The Carbon Monoxide (CO) detector alarm will not sense smoke, fire, or any other poisonous gas other than carbon monoxide.

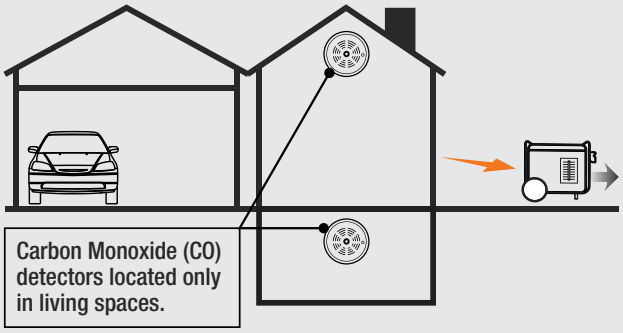

⚠ WARNING

Smoke alarms cannot detect Carbon Monoxide (CO) gas.

To better educate yourself about all carbon monoxide risks, go to www.takeyourgeneratoroutside.com

⚠ DANGER

Tampering with the CO Shield® system will result in a hazardous condition and will void your warranty.

Removing the CO Shield® module will not allow the generator to start.

⚠ DANGER

Operate equipment with guards in place.

Rotating parts can entangle hands, feet, hair, clothing and/or accessories. Traumatic amputation or severe laceration can result.

Keep hands and feet away from rotating parts.

Tie up long hair and remove jewelry.

DO NOT wear loose-fitting clothing, dangling drawstrings or items that could become caught.

⚠ DANGER

Generator produces powerful voltage.

DO NOT touch bare wires or receptacles.

DO NOT use electrical cords that are worn, damaged or frayed. Use only Champion electrical cords for proper application.

DO NOT operate generator in wet weather.

DO NOT allow children or unqualified persons to operate or service the generator.

Use a ground fault circuit interrupter (GFCI) in damp areas and areas containing conductive material such as metal decking.

Connection to your home's electrical system requires a listed 30A transfer switch installed by a licensed electrician and approved by the local authority having jurisdiction. The connection must isolate the generator from the utility power and must comply with all applicable laws and electrical codes.

⚠ WARNING

Do not use generator for medical life support uses.

In case of emergency, call 911 immediately.

NEVER use this product to power life support devices or life support appliances.

Inform your electricity provider immediately if you or anyone in your household depends on electrical equipment to live.

Inform your electrical provider immediately if a loss of power would cause you or anyone in your household to experience a medical emergency.

⚠ WARNING

Spark from removed spark plug wire can result in fire or electrical shock.

When servicing the generator:

Disconnect the spark plug wire and place it where it cannot contact the plug or any other metal object.

DO NOT check for spark with the plug removed.

Use only approved spark plug testers.

⚠ WARNING

Running engines produce heat. Severe burns can occur on contact. Combustible material can catch fire on contact.

DO NOT touch hot surfaces.

Avoid contact with hot exhaust gases.

Allow equipment to cool before touching.

Maintain at least 3 ft. (91.4 cm) of clearance on all sides to ensure adequate cooling.

Maintain at least 5 ft. (1.5 m) of clearance from combustible materials.

⚠ WARNING

Rapid retraction of the recoil cord will pull hand and arm towards the engine faster than you can let go. Broken bones, fractures, bruises or sprains could result. Unintentional startup can result in entanglement, traumatic amputation or laceration.

When starting engine, pull the recoil cord slowly until resistance is felt and then pull rapidly to avoid kickback.

DO NOT start or stop the engine with electrical devices plugged in and turned on.

⚠ WARNING

Although the generator contains a spark arrester, maintain a minimum distance of 5 ft. (1.5 m) from dry vegetation to prevent fires.

⚠ CAUTION

Exceeding the generator's running capacity can damage the generator and/or electrical devices connected to it.

DO NOT overload the generator.

DO NOT tamper with the governed speed.

DO NOT modify the generator in any way.

⚠ CAUTION

Start the generator and allow the engine to stabilize before connecting electrical loads.

Connect electrical equipment in the off position, and then turn them on for operation.

Turn electrical equipment off and disconnect before stopping the generator.

⚠ CAUTION

Improper treatment or use of the generator can damage it, shorten its life or void the warranty.

Use the generator only for intended uses.

Operate only on level surfaces.

DO NOT expose generator to excessive moisture, dust, or dirt.

DO NOT allow any material to block the cooling slots.

If connected devices overheat, turn them off and disconnect them from the generator.

DO NOT use the generator if:

- Electrical output is lost
- Equipment sparks, smokes or emits flames
- Equipment vibrates excessively

Fuel Safety

⚠ DANGER

GASOLINE AND GASOLINE VAPORS ARE HIGHLY FLAMMABLE AND EXPLOSIVE.

Fire or explosion can cause severe burns or death.

Gasoline and gasoline vapors:

- Gasoline vapors are highly flammable and explosive.
- Gasoline vapors can cause a fire or explosion if ignited.
- Gasoline is a liquid fuel and the resulting gasoline vapors can ignite and cause a fire or explosion.
- Gasoline is a skin irritant and needs to be cleaned up immediately if spilled on skin or clothes.
- Gasoline has a distinctive odor, this will help detect potential leaks quickly.
- In any petroleum gas fire, flames should not be extinguished unless by doing so the fuel supply valve can be turned OFF. This is because if a fire is extinguished and a supply of fuel is not turned OFF, then an explosion hazard could be created.
- Gasoline vapors expand and contract with ambient temperatures. Never fill the gasoline tank past the red FULL indicator on the fuel filter, as gasoline vapors needs room to expand if temperatures rise.

⚠ WARNING

When adding or removing gasoline:

Do not light or smoke cigarettes.

Always stop the engine and allow to cool for a minimum of two minutes before refueling.

Always loosen gasoline cap slowly to release vapor pressure and to keep fuel from escaping around the gasoline cap.

Always replace and tighten the gasoline cap securely after fueling.

Never remove the gasoline cap or add gasoline while the engine is running or when the engine is hot.

Only fill or drain gasoline outdoors in a well-ventilated area.

Do not pump gasoline directly into the generator at the gas station.

Always store gasoline in an EPA/CARB compliant container or to transfer the gasoline to the generator.

Do not overfill the gasoline tank.

Always keep gasoline away from sparks, open flames, pilot lights, heat and other sources of ignition.

⚠ WARNING

When starting the generator:

Do not attempt to start a damaged generator.

Always check that the gasoline cap, air filter, spark plug, fuel lines and exhaust system are properly in place.

Always allow spilled gasoline to evaporate fully before attempting to start the engine.

Always be certain that the generator is resting firmly on level ground.

⚠ WARNING

When operating the generator:

Do not move or tip the generator during operation.

⚠ WARNING

When transporting or servicing the generator:

Always check that the fuel valve is in the OFF position and the gasoline tank is empty.

Disconnect the spark plug wire.

⚠ WARNING

When storing the generator:

Always store away from sparks, open flames, pilot lights, heat and other sources of ignition.

Never store generator or gasoline near furnaces, water heaters, or any other appliances that produce heat or have automatic ignitions.

⚠ DANGER

Never place a gasoline container, gasoline tank, LPG cylinder or any combustible material in the path of the exhaust stream during operation of the engine.

⚠ WARNING

Never use a gasoline container, gasoline tank, or any other fuel item that is broken, cut, torn or damaged.

Safety and Dataplate Labels

These labels warn you of potential hazards that can cause serious injury. Read them carefully.

If a label comes off or becomes hard to read, contact Technical Support Team for possible replacement.

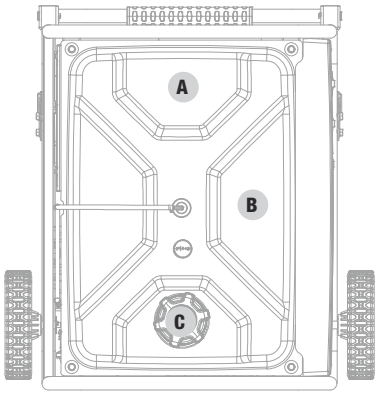

Top

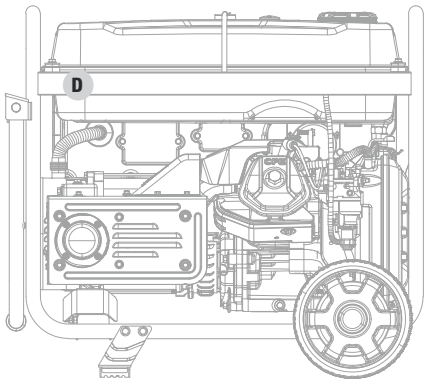

Back

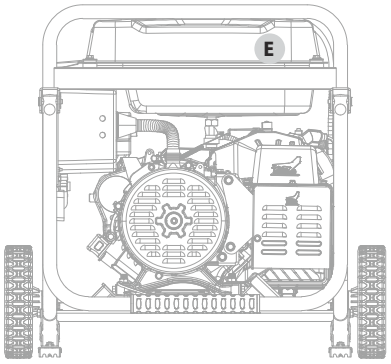

Side

	LABEL	DESCRIPTION
A		Safety Symbols/ CO Danger
B	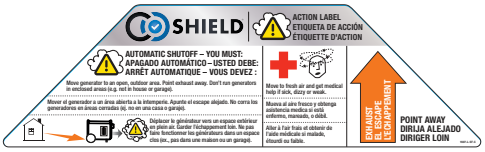	CO Shield® Action – automatic shutoff *See CO Shield® section
C	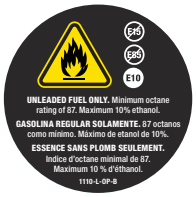	Fuel
D	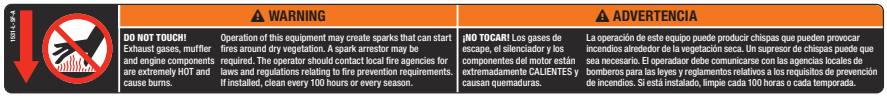	Hot Surface
E	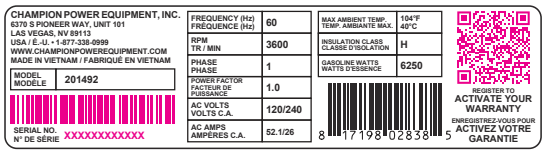	Dataplate

Safety Symbols

Some of the following symbols may be used on this product. Please study them and learn their meaning. Proper interpretation of these symbols will allow you to more safely operate the product.

SYMBOL	MEANING
	Read Operator's Manual. To reduce the risk of injury, user must read and understand operator's manual before using this product.
	Clearance. Keep all objects at least 5 feet (1.5m) from generator. Heat from the muffler and exhaust gas can ignite combustible objects.
	Ground. Consult with local electrician to determine grounding requirements before operation.
	Electric Shock. Failure to use in dry conditions and to observe safe practices can result in electric shock. Improper connections to a building can allow current to backfeed into utility lines, creating an electrocution hazard. A transfer switch must be used when connecting to a building.
	Fire/Explosion. Fuel and its vapors are extremely flammable and explosive. Fire or explosion can cause severe burns or death. Keep generator at least 5 feet (1.5m) from all objects to prevent combustion.
	Hot Surface. To reduce the risk of injury or damage, avoid contact with any hot surface.
	Open Flame Alert. Fuel and its vapors are extremely flammable and explosive. Keep fuel away from smoking, open flames, sparks, pilot lights, heat, and other ignition sources.
	Wet Conditions Alert. Do not expose to rain or use in damp locations.

Operation Symbols

Some of the following symbols may be used on this product. Please study them and learn their meaning. Proper interpretation of these symbols will allow you to more safely operate the product.

SYMBOL	MEANING
	On
	Stop or Off
	High CO Warning. Move generator to an open, outdoor area. Move to fresh air and get medical help if sick, dizzy or weak.
	CO Shield System Fault. Electrical issue, end of life.
	Hertz
	Volts
	Run time
	Locking Receptacle

SYMBOL	MEANING
	Circuit Breaker Reset: Push
	Circuit Breaker Reset: Flip
	Neutral Bonded to Frame. Neutral circuit **IS** electrically connected to the frame/ground of the generator.
	Fuel/Gasoline Valve On/Off
	Choke
	Run
	Gasoline Tank: Full
	Gasoline Tank: Empty
	Ground Terminal

Quick Start Label Symbols

Some of the following symbols may be used on this product. Please study them and learn their meaning. Proper interpretation of these symbols will allow you to more safely operate the product.

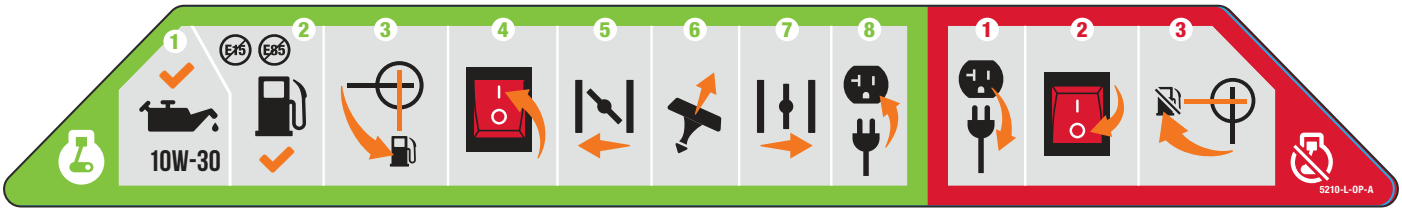

Starting the Engine

⚠ DANGER

Move generator outside and far away from windows, doors and intake ventilation covers.

1. **Check oil level.**
   Recommended oil is 10W-30.
2. **Check gasoline level.**
   When adding gasoline, use a minimum octane rating of 87 and an ethanol content of 10% or less by volume.
3. Turn the **fuel valve** to “ON” position.
4. Press **engine switch** to the “ON” position.
5. Move **choke lever** to “CHOKE” position.
6. Pull the recoil cord.
7. Move the **choke lever** to “RUN” position.
8. Plug in desired device.

Stopping the Engine

1. Turn off and unplug all connected electrical loads.
2. Press the **engine switch** to the “OFF” position.
3. Turn the **fuel valve** to the “OFF” position.

CONTROLS AND FEATURES

Read this operator's manual before operating your generator. Familiarize yourself with the location and function of the controls and features. Save this manual for future reference.

Generator

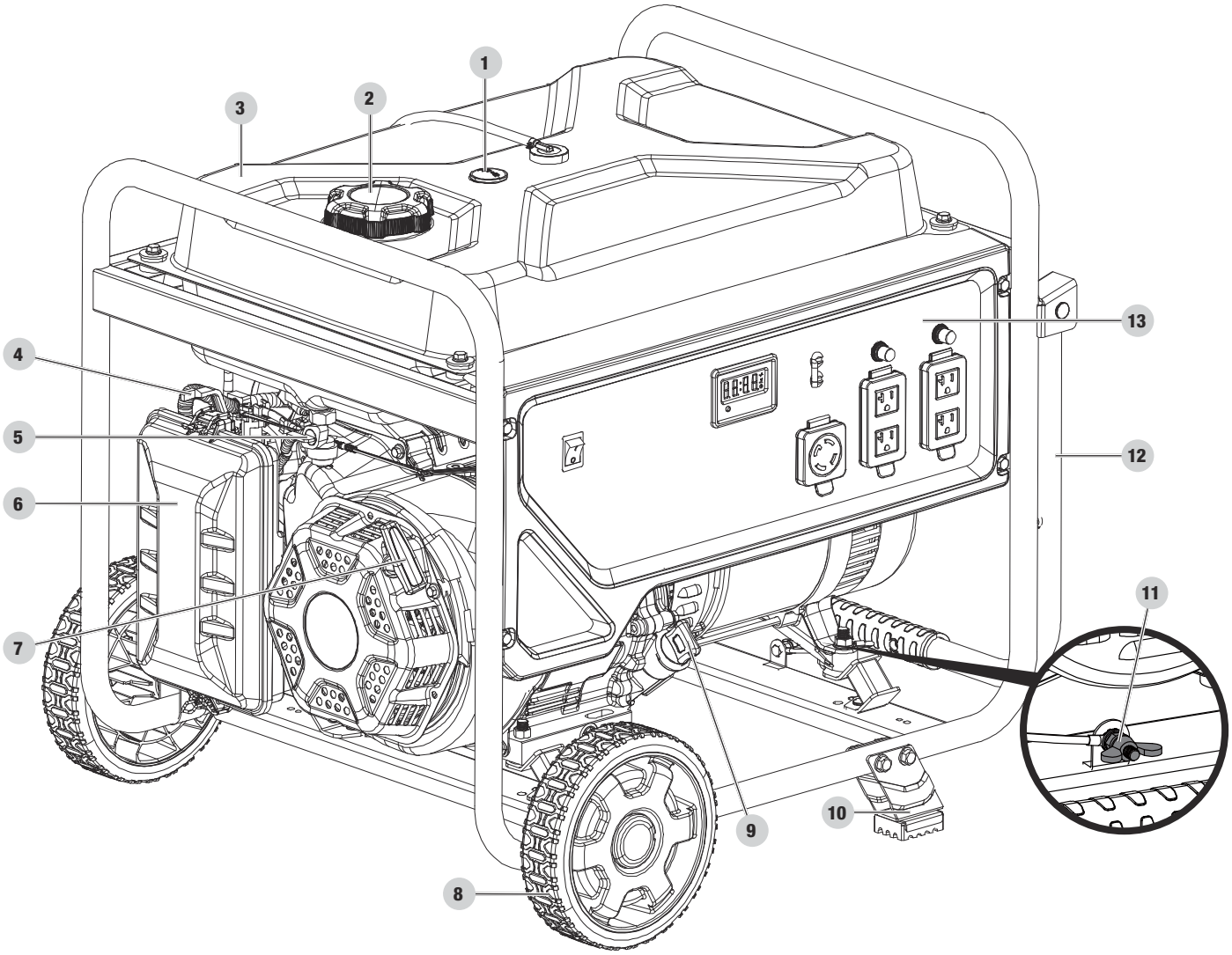

1. **Gasoline Gauge**
2. **Fuel Cap** – Remove to add fuel.
3. **Gasoline Tank** – 7.7 gal. (29.1 L)
4. **Choke** – Used to start the engine.
5. **Fuel Valve** – Used to turn fuel supply on and off to engine.
6. **Air Filter** – Protects the engine by filtering dust and debris from the intake air.
7. **Recoil Starter** – Used to manually start the engine.
8. **Never Flat Wheels** – 8 in. (20.3 cm)
9. **Oil Fill Cap/Dipstick** – Used to check and fill oil level.
10. **Support Leg**
11. **Ground Terminal** – Consult an electrician for local grounding regulations.
12. **Folding Handle** – Used to move unit by lifting and rolling on wheels. Do not use to lift or carry the unit.
13. **Control Panel** – See *Control Panel* section.

Control Panel

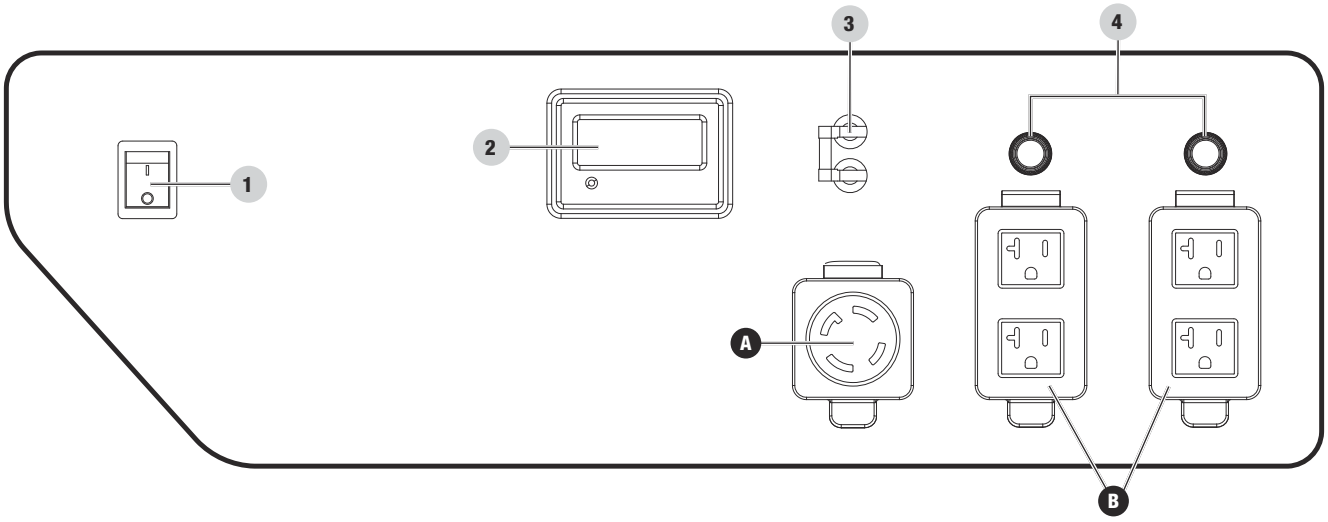

1. **Engine Switch** – Used to put in START mode or STOP the generator.
2. **Intelligauge** – See *Intelligauge* section.
3. **Circuit Breakers (Flip Reset)** – Protects the generator against electrical overloads.
4. **Circuit Breakers (Push Reset)** – Protects the generator against electrical overloads.

RECEPTACLES		
A		**120/240V AC, 26A Locking (NEMA L14-30R)** May be used to supply electrical power for operation of 120/240 Volt AC, 26 Amp, single phase, 60 Hz electrical loads.
B		**(4×) 120V AC, 20A GFCI (NEMA 5-20R)** May be used to supply electrical power for operation of 120 Volt AC, 20 Amp, single phase, 60 Hz electrical loads.

Intelligauge with CO Shield®

Four mode digital meter for displaying voltage, frequency (hertz), run time, and total run time.

A. **CO Shield® LED** – The CO Shield® technology monitors for accumulation of poisonous carbon monoxide (CO) gas produced by engine exhaust when the generator is running. If CO Shield® detects elevated levels of CO gas, it automatically shuts off the engine.

***See CO Shield section for more information*

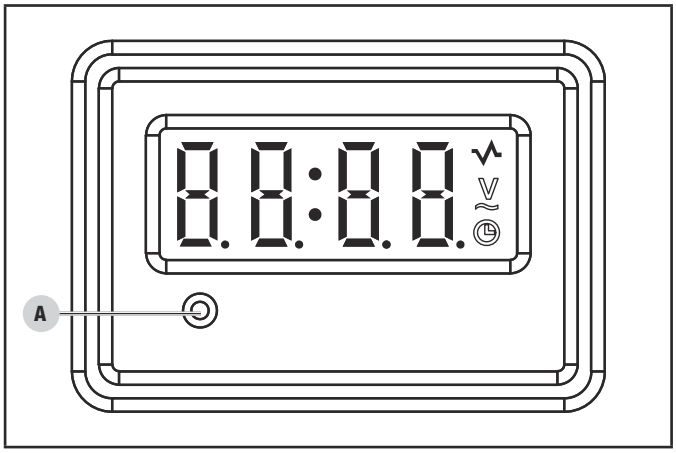

	MODE	DESCRIPTION	
1	Voltage (V)	Output voltage of the generator.	
		Example: 120 volts	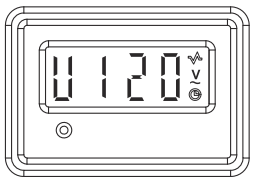
2	Frequency (H)	Output frequency in hertz.	
		Example: 60.0 hertz	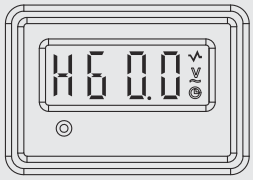
3	Run Time (R)	Run time of the generator for the current session	
		Example: 6 hours	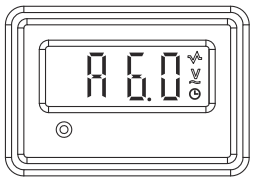
4	Total Run Time	Total run time of the generator since first operation	
		Example: 16 hours	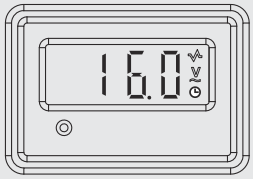

Parts Included

Accessories

Engine Oil ..... 1.2 US qt. (1100 mL)
Oil Funnel 1

Assembly Parts

Wheels
- 8 in. (20.3 cm) Never Flat Wheel (A) 2
- Wheel Hub Cap (B) 2
- Roll Pin (C) 2
- Large R-clip (D) 2

Engine Vibration Mounts
- Support Leg with Vibration Mounts (E) 2
- Flange Bolt (M8×40) (F) 4
- Flange Lock Nut (M8) (G) 4

Tools Needed

– Wrench/Socket set (metric)
– Pliers

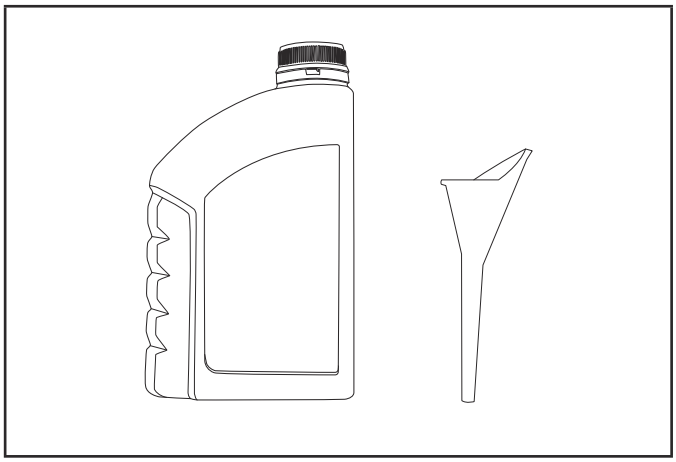

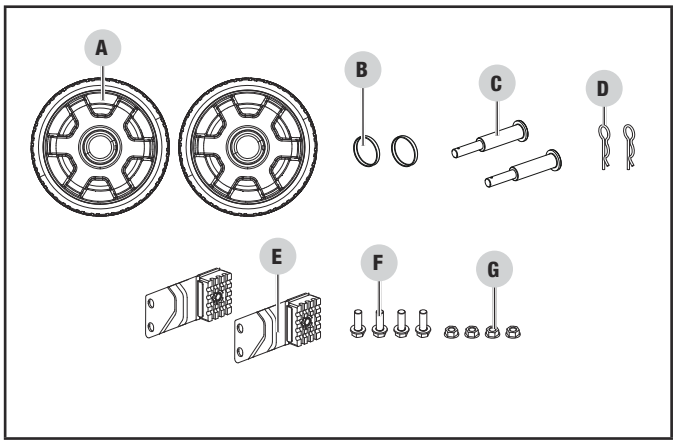

ASSEMBLY

Your generator requires some assembly. This unit ships from our factory without oil. It must be properly serviced with fuel and oil before operation.

If you have any questions regarding the assembly of your generator, call our Technical Support Team at 1-877-338-0999. Please have your serial number and model number available.

Unpacking

1. Set the shipping carton on a solid, flat surface.
2. Remove everything from the carton except the generator.
3. Carefully cut each corner of the box from top to bottom. Fold each side flat on the ground to provide a surface area to work with the generator.

Install the Wheel Kit

⚠ CAUTION

The wheel kit is not intended for over-the-road use.

Install the Wheels

1. Before adding fuel and oil, tip the generator onto it's recoil end.
2. Remove wheel hub cap (B) from wheel by inserting a small screwdriver into the slot provided and pry upward.
3. Slide the roll pin (C) through the wheel (A) from the outside.
4. Slide the roll pin through the mount point on the frame.
5. Secure with the r-clip (D).
6. Re-install hub cap on wheel.
7. Repeat to attach the second wheel.

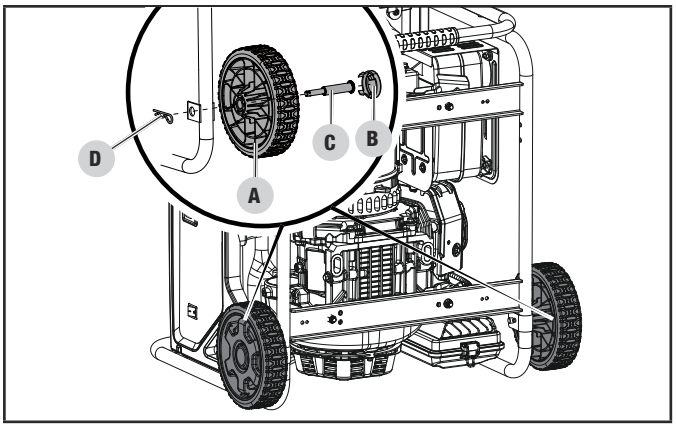

Install the Support Leg

1. Attach the support leg (E) to the generator frame with flange bolts (F) and flange lock nuts (G).
2. Slowly tip the generator back down so that it rests on the wheels and support Leg.

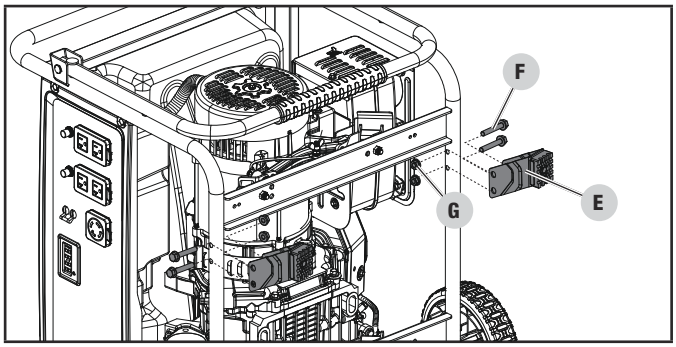

Add Engine Oil

⚠ WARNING

DO NOT attempt to crank or start the engine before it has been properly filled with the recommended type and amount of oil. Damage to the generator as a result of failing to follow these instructions will void your warranty.

NOTICE

The generator rotor has a sealed, pre-lubricated ball bearing that requires no additional lubrication for the life of the bearing.

NOTICE

The recommended oil type for typical use is **10W-30 automotive oil**. However, using the listed conventional oils shown in the "Recommended Engine Oil Type" chart may be used for typical use including the first 5 hours of the break-in run time period of the engine.

If running generator in extreme temperatures, refer to the "Recommended Engine Oil Type" chart.

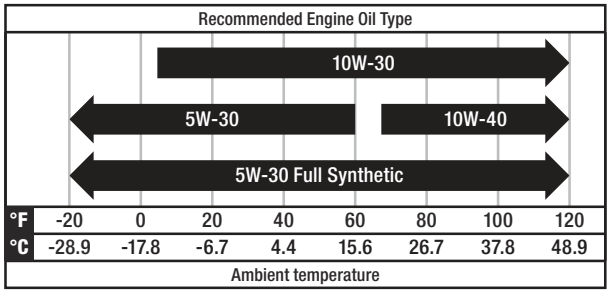

1. Place the generator on a flat, level surface.
2. Remove oil fill cap/dipstick to add oil.

3. Using a funnel, add up to 1.2 US qt. (1100 mL) of oil (included) and replace oil fill cap/dipstick. DO NOT OVERFILL.

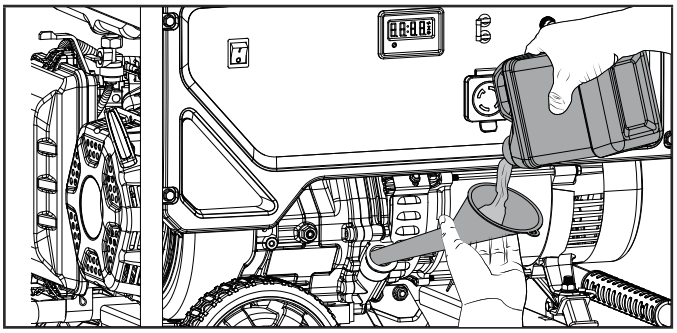

4. Check engine oil level at every use and add as needed.

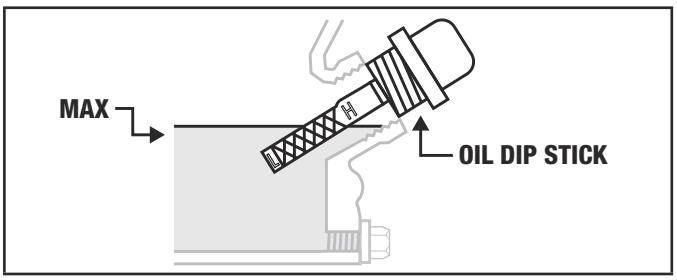

NOTICE

Once oil has been added, a visual check should show oil about 1-2 threads from running out of the fill hole.

When using the dipstick to check oil level, DO NOT screw in the dipstick while checking.

NOTICE

Check oil level often during the break-in period. Refer to the *Maintenance* section for recommended service intervals.

CAUTION

This engine is equipped with a low oil shut-off and will stop when the oil level in the crankcase falls below the threshold level.

NOTICE

The first 5 hours of run time are the break-in period for the unit. During the break in period stay at or below 50% of the running watt rating and vary the load occasionally to allow stator windings to heat and cool. Adjusting the load will also cause engine speed to vary slightly and help seat piston rings. After the 5 hour break-in period, change the oil.

NOTICE

Synthetic oil may be used after the 5 hour initial break-in period. Using synthetic oil does not decrease the recommended oil change interval. Full synthetic 5W-30 oil will aid in starting in cold ambient < 41º F (5º C) temperatures.

Add Fuel

DANGER

Gasoline vapors are highly flammable and extremely explosive.

DO NOT light or smoke cigarettes. Fire or explosion can cause severe burns or death.

Only fill or drain fuel outdoors in a well-ventilated area. DO NOT pump gasoline directly into the generator. Use an approved container to transfer the fuel to the generator.

Never use a gasoline container, gasoline tank, or any other fuel item that is broken, cut, torn or damaged.

DO NOT overfill the gasoline tank. Always keep fuel away from sparks, open flames, pilot lights, heat and other sources of ignition.

Use clean, fresh, regular unleaded gasoline with a minimum octane rating of 87 and an ethanol content of 10% or less by volume. E10 E15 E85

DO NOT mix oil with gasoline.

1. Remove the gasoline cap.
2. Slowly add gasoline to the tank. Tank is full when gasoline reaches red circle on screen. DO NOT OVERFILL. Gasoline can expand after filling. A minimum of ¼ in. (6.4 mm) of space left in the tank is required for gasoline expansion, although more than ¼ in. (6.4 mm) is recommended. Gasoline can be forced out of the tank as a result of expansion if overfilled, and can affect the stable running condition of the generator.

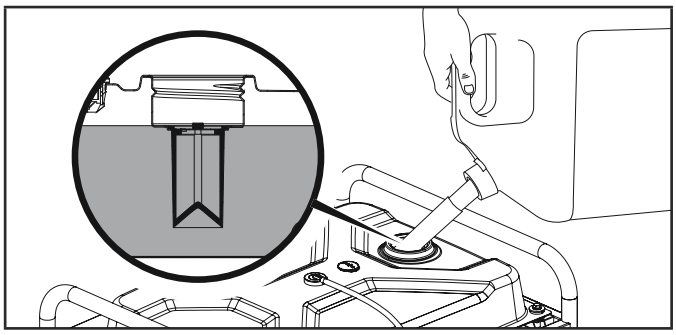

3. The approximate fuel level is shown on the fuel gauge on top of the fuel tank.

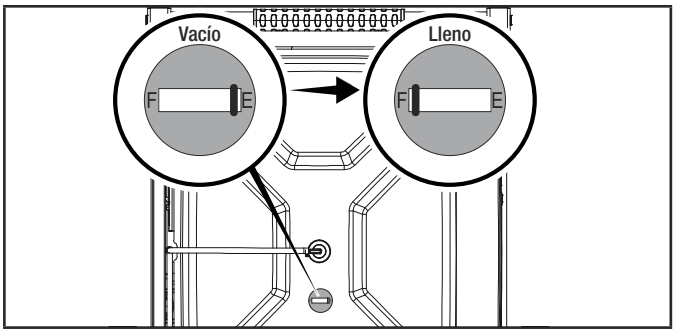

4. Screw on the gasoline cap and wipe away any spilled fuel.

⚠ CAUTION

Use unleaded gasoline with a minimum octane rating of 87 and an ethanol content of 10% or less by volume.

DO NOT light cigarettes or smoke when filling the tank.

DO NOT mix oil and gasoline.

DO NOT overfill the tank. Fill tank to approximately ¼ in. (6.4 mm) below the top of the tank to allow for gasoline expansion.

DO NOT pump gasoline directly into the generator at the pump. Use an approved fuel container to transfer the gasoline to the generator.

DO NOT fill tank indoors.

DO NOT fill tank when the engine is running or hot.

⚠ WARNING

Pouring gasoline too fast through the fuel screen may result in gasoline splashing over the generator and operator while filling.

NOTICE

The generator engine works well with 10% or less ethanol blended gasoline. When using ethanol-gasoline blends there are some issues worth noting:

- Ethanol-gasoline blends can absorb more water than gasoline alone.
- These ethanol blends can eventually separate, leaving water or a watery goo in the tank, fuel valve and carburetor. The compromised gasoline can be drawn into the carburetor and cause damage to the engine and/or create potential hazards.
- If a fuel stabilizer is used, confirm that it is formulated to work with ethanol-gasoline blends.
- Any damages or hazards caused by using ethanol blended gasoline higher than 10% by volume, improperly stored gasoline, and/or improperly formulated stabilizers, are not covered by manufacturer's warranty.

It is advisable to always shut off the gasoline supply and run the engine to starvation after each use. See Storage instructions for extended non-use.

Grounding

Your generator must be properly connected to an appropriate ground to help prevent electric shock.

⚠ WARNING

Failure to properly ground the generator can result in electric shock.

A ground terminal connected to the frame of the generator has been provided (see Controls and Features for terminal location). For remote grounding, connect a length of heavy gauge (12 AWG minimum) copper wire between the generator ground terminal and a copper rod driven into the ground. We strongly recommend that you consult with a qualified electrician to ensure compliance with local electrical codes.

Neutral Floating*

- Neutral circuit **IS NOT** electrically connected to the frame/ground of the generator.
- The generator (stator winding) is isolated from the frame and from the AC receptacle ground pin.
- Electrical devices that require a grounded receptacle pin connection will not function if the receptacle ground pin is not functional.

Neutral Bonded to Frame*

- Neutral circuit **IS** electrically connected to the frame/ground of the generator.

– The generator system ground connects lower frame cross-member below the alternator. The system ground is connected to the AC neutral wire.

**See your Specifications section for specified type of grounding.*

OPERATION

CO Shield® - Carbon Monoxide (CO) Detection and Auto-shutoff System

CO Shield® technology monitors the accumulation of carbon monoxide (CO), a poisonous gas produced by engine exhaust when the generator is running. If CO Shield® detects unsafe elevated levels of CO gas, it automatically shuts off the engine.

CO SHIELD® IS NOT A SUBSTITUTE FOR AN INDOOR CARBON MONOXIDE ALARM OR FOR INDOOR OPERATION.

DO NOT allow engine exhaust fumes to enter a confined area through windows, doors, vents or other openings.

Generators must ALWAYS be used outdoors, far away from occupied buildings with engine exhaust pointed away from people and buildings.

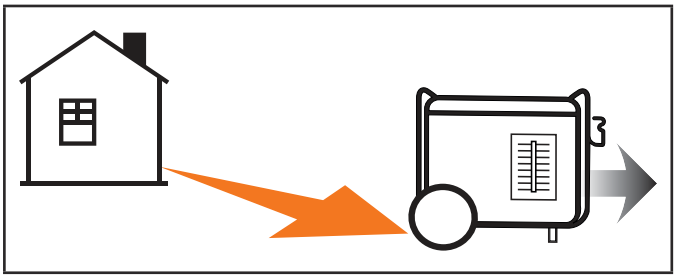

If misused and operated in an unapproved and unsafe location that results in the accumulation of poisonous CO gas inside an enclosed or partially enclosed space, for example a house, garage or a garage with the door partially open, CO Shield® will automatically shut off the generator and then will illuminate a blinking red LED light. **Read the action label for next steps.**

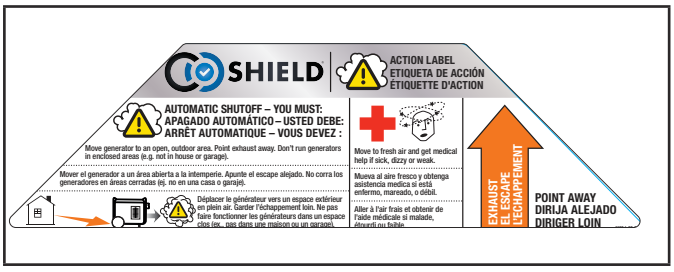

In the event of an engine shut off, when you approach the generator to investigate, a blinking **red** LED light in the CO Shield® area provides notification that the generator shut off due to an accumulating CO hazard. The red LED light will blink for at least five (5) minutes after an engine shut off event.

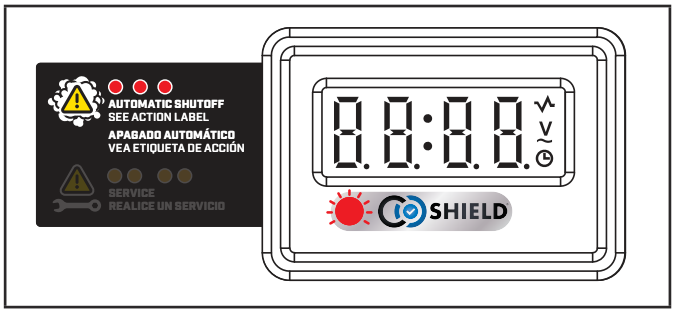

Move the generator far away to an open, outdoor area and point the exhaust away from people and buildings. Once relocated to a safe area, the generator can be restarted, and the proper electrical connections made. Introduce fresh air and ventilate the location where the generator shut off.

When restarting, the red and yellow LED will blink ten (10) times simultaneously to indicate the LED is working.

NOTICE

This blinking LED light does not indicate CO Shield® is working, as CO Shield® is working at all times when the generator is running. Also, the LED light will not blink (10) times if the generator was restarted within 1 minute after it was manually shut off. This does not occur if generator shut off from a high CO event.

If CO Shield® system experiences a fault and no longer provides protection, the generator is shutoff automatically and the **yellow** LED light will blink for at least five (5) minutes to notify you of the fault.

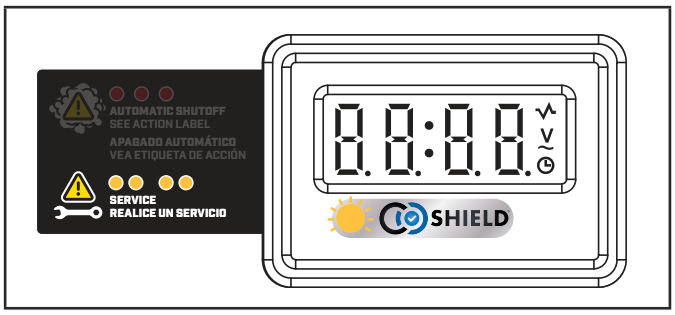

Call our Technical Support Team at 1-877-338-0999 for repair. The generator can be restarted, but will continue to shutoff.

NOTICE

CO Shield® will detect the accumulation of carbon monoxide (CO) from other fuel burning sources such as engine powered equipment, or propane heaters used in the area of operation. If another generator is used and the exhaust stream is pointed at a CO Shield® equipped generator, the CO Shield® may initiate a shutoff due to rising carbon monoxide (CO) levels. This is not a fault. Poisonous carbon monoxide (CO) has been detected. You must take action to move and direct the generator exhaust stream to better disperse carbon monoxide (CO) far away from people or buildings.

DANGER

Tampering with the CO Shield® system will result in a hazardous condition and will void your warranty.

Removing the CO Shield® module will not allow the generator to start.

Generator Location

WARNING

NEVER operate the generator inside any building, garage, basement, crawlspace, shed, enclosure or compartment, including a generator compartment of a recreational vehicle.

NEVER operate or start the generator in the back of an SUV, camper, trailer, truck bed (regular sides, flat or other configuration), under staircases, stairwells, next to walls or buildings or in any other location that will not allow for adequate cooling of the generator or for the proper exit of the exhaust flow from the muffler system.

DO NOT operate or store the generator in wet weather conditions such as rain or snow. Using a generator in wet conditions could result in serious injury or death due to electrocution.

In some state's generators may be required to be registered with the local utility company when used at construction sites and may be subject to additional rules and regulations, consult your local municipal authority.

Generators should always be operated on a flat, level surface at all times (even when not in operation).

Generators must have a minimum of 5 feet (1.5 m) of clearance from all combustible material.

Generators must also have a minimum of 3 feet (91.4 cm) of air flow clearance on all sides to allow for adequate performance cooling, maintenance and servicing.

Always place the generator in a well-ventilated area. NEVER place the generator near air intake vents or where exhaust fumes could be drawn into occupied or confined spaces.

Always carefully consider wind and air currents when positioning generator.

Always allow generators to properly cool before transport or for storage purposes.

Failure to follow proper safety precautions may result in personal injury, damage to the generator and void the manufacturer's warranty.

WARNING

During operation the muffler and exhaust fumes will become hot. If adequate cooling and breathing space are not supplied, or if the generator is blocked or enclosed, temperatures can become extremely heated and may lead to fire.

⚠ WARNING

Do not expose to rain or use in damp locations.

Keep all objects a minimum of 5 feet (1.5m) away from the generator at all times. Heat from the muffler surface and exhaust gas stream can ignite combustible materials.

⚠ WARNING

If you must operate in rain or damp locations, DO NOT operate without proper protection of the electrical components.

Use of a safety canopy that is fire retardant and will provide proper air ventilation for the engine exhaust gas stream may be used.

Visit championpowerequipment.com or call to find your Storm Shield cover.

Surge Protection

Electronic devices, including computers and many programmable appliances use components that are designed to operate within a narrow voltage range and may be affected by momentary voltage fluctuations. While there is no way to prevent voltage fluctuations, you can take steps to protect sensitive electronic equipment.

– Install UL1449, CSA-listed, plug-in surge suppressors on the outlets feeding your sensitive equipment.
  Surge suppressors come in single- or multi-outlet styles. They're designed to protect against virtually all short-duration voltage fluctuations.

Starting the Engine

1. Make certain the generator is on a flat, level surface.
2. Disconnect all connected electrical loads from the generator. Never start or stop the generator with electrical devices plugged in or turned on.
3. Turn the gasoline fuel valve to the "ON" position.

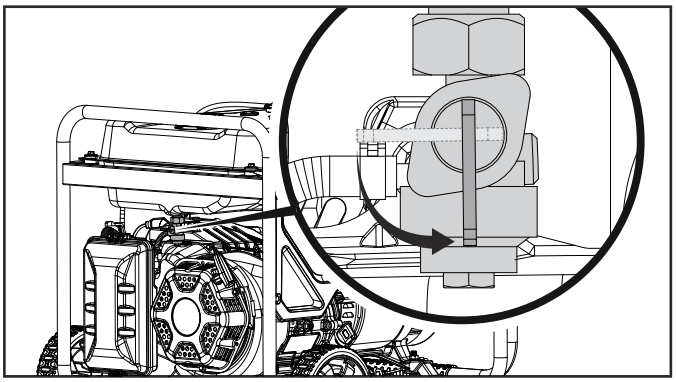

4. Push the engine switch to the "ON" position.

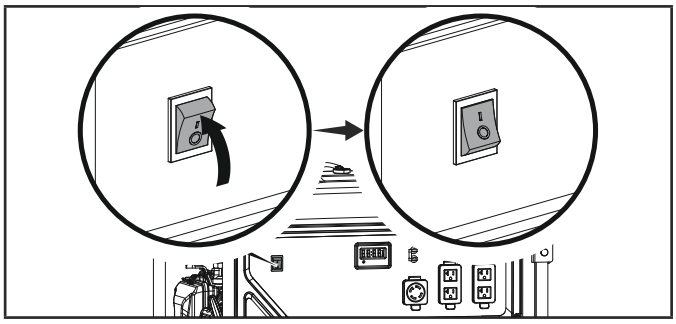

5. Move the choke to the "CHOKE" position.

   5a. For restarting a warm engine, move the choke to 75% of the "CHOKE" position.

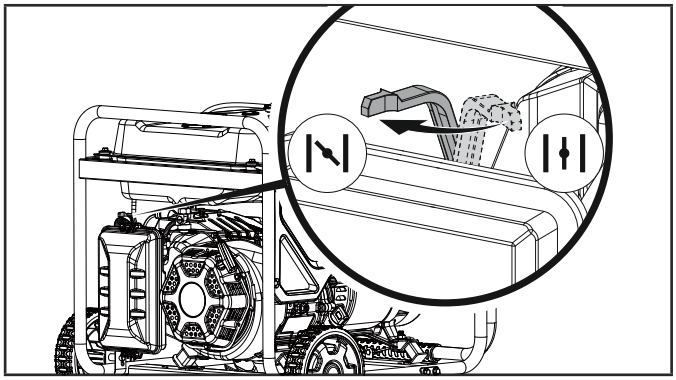

6. Pull the recoil cord slowly until resistance is felt and then pull rapidly.

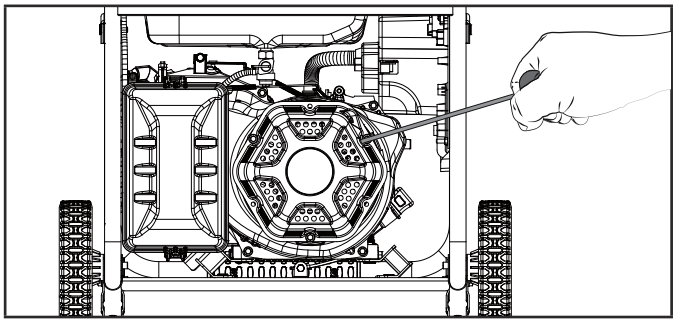

7. As soon as engine starts, move the choke to the "RUN" position over a 2-5 second duration.

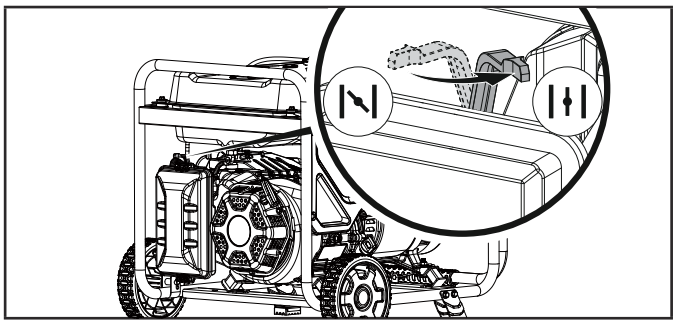

8. Connect electrical loads.

NOTICE

Keep choke in “CHOKE” position for only 1 pull of the recoil cord. After first pull, move choke to “RUN” position for up to 3 pulls of the recoil cord. Too much choke leads to spark plug fouling/engine flooding due to lack of incoming air. This will cause the engine not to start.

NOTICE

For gasoline restarts with hot engine in hot ambient temperature > 86°F (30°C), keep choke in 75% of the “CHOKE” position for only 1 pull of the recoil cord. After first pull, move choke to “RUN” position for up to 3 pulls of the recoil cord. Too much choke leads to spark plug fouling/engine flooding due to lack of incoming air. This will cause the engine not to start.

NOTICE

For gasoline starting in cold ambient temperature < 59°F (15°C), the choke must be in 100% of the “CHOKE” position for manual start procedures. Do not over-choke. As soon as engine starts, gradually move the choke lever to the “RUN” position over a 2-5 second duration.

NOTICE

If the engine starts but does not run make certain that the generator is on a flat, level surface. The engine is equipped with a low oil sensor that will prevent the engine from running when the oil level falls below a critical threshold.

Connecting Electrical Loads

After starting the generator, let the engine temperature stabilize for 3-5 minutes before connecting electrical devices.

NOTICE

Make sure ALL circuit breakers are set to the ON or closed position. Flip reset and/or push reset ALL circuit breakers to the ON or closed position.

Plug in and turn on the desired 120 or 240 (if applicable) Volt AC single phase, 60 Hz electrical loads.

- DO NOT connect 3-phase loads to the generator.
- DO NOT overload the generator.
- Use only a high quality, insulated, compatible (3-wire or 4-wire) grounded cord set rated equal to or greater (volts and amps) than the receptacle plugging into.

WARNING

Always remember to plug your appliances directly into the generator and do not plug the generator power cord into any electrical outlet or connect to the circuit breaker panel in your home. Connecting a generator to your home’s electric utility company’s power lines, or to another power source, called ‘backfeeding’ is a dangerous practice that is illegal in many states, provinces and municipalities.

This action if done incorrectly could damage your generator, appliances and could cause serious injury or death to you or a utility worker when attempting to restore power during an outage occurrence in the neighborhood who may then unexpectedly encounter high voltage on the utility line and suffer a fatal shock.

Whether injuries occur or not, if installed incorrectly and not to applicable laws and codes, you may be subject to fines or the utility company may disconnect your home power should this practice be found in your home.

If the generator will be connected to a building electrical system, those connections must isolate the generator power from the utility power. You are responsible for ensuring your generator’s electricity does not backfeed into the electric utility power lines. These connections must comply with all applicable laws and codes – Consult your local utility company or a qualified electrician to properly install this connection.

Do Not Overload Generator

Capacity

Follow these simple steps to calculate the running and starting watts necessary for your purposes:

1. Select the electrical devices you plan on running at the same time.
2. Total the running watts of these items. This is the amount of power you need to keep your items running.
3. Identify the highest starting wattage of all devices identified in step 1. Add this number to the number calculated in step 2. Starting wattage is the surge of power needed to start some electric driven equipment. Following the steps listed under “Power Management” will guarantee that only one device will be starting at a time.
4. If the generator power output is cut off due to an overload condition indicated by the AC overload blinking light, lower the load by unplugging one or more items, then press the AC overload reset button before restarting the generator for continued normal operation.

Power Management

Use the following formula to convert voltage and amperage to watts:

Volts × Amps = Watts

To prolong the life of your generator and attached devices, follow these steps to add electrical load:

1. Start the generator with no electrical load attached.
2. Allow the engine to run for several minutes to get up to temperature.
3. Make sure all circuit breakers are set to the run position.
4. Plug in and turn on the first item. It is best to attach the item with the largest load first.
5. Allow the engine to stabilize.
6. Plug in and turn on the next item.
7. Allow the engine to stabilize.
8. Repeat steps 5-6 for each additional item.

NOTICE

Never exceed the specified capacity when adding loads to the generator.

GFCI

Your generator is equipped with ground fault circuit interrupter (GFCI) receptacles. In the event of a ground fault, a GFCI trips automatically to stop the flow of electricity and prevent serious injury. The green indicator light (A) on the receptacle will also turn off. Press the “RESET” (B) button located on the front of the receptacle to restore flow of electricity. The indicator light will also turn back on. GFCI does not protect against circuit overloads.

To ensure proper operation of the GFCI duplex, perform this test monthly:

1. With the generator running, plug a lamp into the GFCI receptacle. Turn the lamp on.
2. Press the “TEST” (C) button located on the front of the receptacle to trip the device. This should immediately stop the flow of electricity and shut off the lamp. If the electricity is not stopped, do not use this receptacle until it has been serviced or replaced.
3. Press the “RESET” button located on the front of the receptacle to restore the flow of electricity. If the indicator light does not come back on or if the GFCI cannot be reset then it must be replaced.

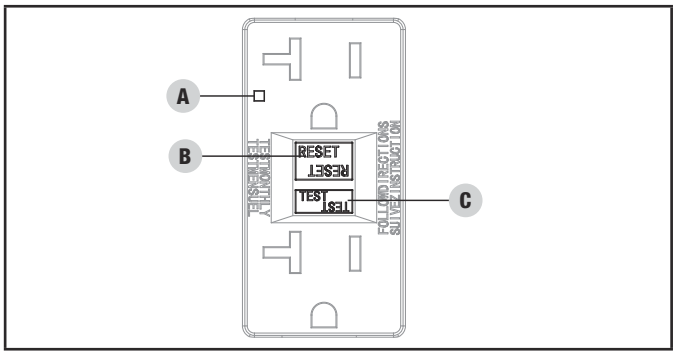

NOTICE

In any electrical application, some current will flow through the protective ground conductor to the ground, this is called leakage current. It takes 4 mA (0.004 A) and higher of leakage current from the hot wire to the ground to cause a GFCI to trip. On circuits protected by GFCI’s, leakage current can cause unnecessary and intermittent tripping.

Some stationary motors, such as a bathroom vent fan, fluorescent lighting fixtures or some refrigerators, may produce enough leakage to cause nuisance tripping. To avoid nuisance tripping, a GFCI should not supply:

– Fluorescent or other types of electric-discharge lighting fixtures.
– Permanently installed electric motors, like air conditioners, furnaces or refrigerators.

Stopping the Engine

1. Turn off and unplug all connected electrical loads. Never start or stop the generator with electrical devices plugged in or turned on.
2. Let the generator run at no-load for several minutes to stabilize internal temperatures of the engine and generator.
3. Press the engine switch to the “OFF” position.

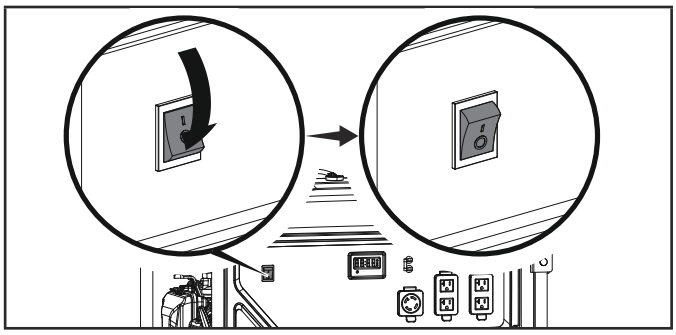

4. Turn the fuel valve to the “OFF” position.

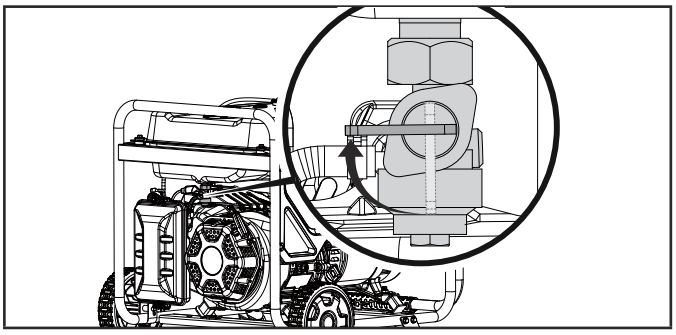

Important: Always ensure that the fuel valve and the engine switch are in the “OFF” position when the generator is not in use.

NOTICE

If the engine will not be used for a period of two (2) weeks or longer, please see the *Storage* section for proper engine and fuel storage.

Moving the Generator

CAUTION

- NEVER lift or carry the generator using the folding handle.
- NEVER tilt sideways while moving the generator.
- ALWAYS place the generator on its wheels in the upright position.
- ALWAYS turn the generator off and ensure the fuel valve is closed.
- ALWAYS make sure engine and muffler are cooled down before the generator can be handled safely (typically 15-30 minutes).

WARNING

The folding handle is not long enough to hold and walk with a full stride when moving the generator. Always side step as you walk to avoid injury to your heels and/or feet. Failure to follow these instructions could result in personal injury or damage to the generator.

1. Begin by raising the folding handle, found on opposite side of wheels.
2. Using the handle, tilt the end of the generator slightly off the ground until balanced on the wheels.
3. While maintaining balance, roll the generator to the desired location.

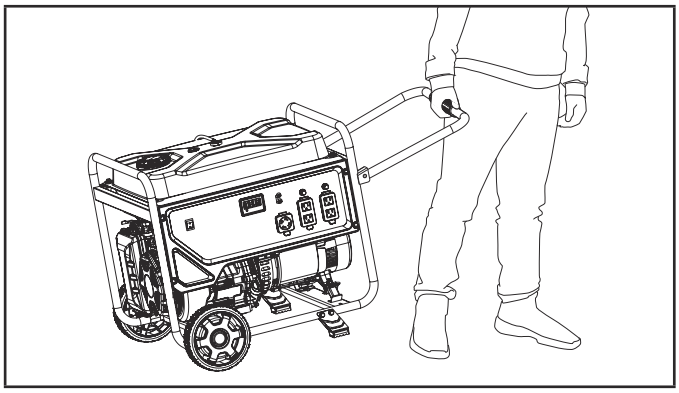

Operation at High Altitude

The density of air at high altitudes is lower than at sea level. Engine power is reduced as the air mass and air-fuel ratio decrease. Engine power and generator output will be reduced approximately 3½% for every 1000 ft. of elevation above sea level. At high altitudes increased exhaust emissions can also result due to the increased enrichment of the air fuel ratio. Other high altitude issues can include hard starting, increased fuel consumption and spark plug fouling.

To alleviate high altitude issues other than the natural power loss, CPE can provide a high altitude carburetor main jet. The alternative main jet and installation instructions can be obtained by contacting our Technical Support Team. Installation instructions are also available in the Technical Bulletin area of the CPE website.

The part number and recommended minimum altitude for the application of the high altitude carburetor main jet is listed in the following table.

In order to select the correct high altitude main jet it is necessary to identify the carburetor model. For this purpose, a code is stamped on the side of the carburetor. Select the correct high altitude jet part number corresponding to the carburetor code found on your particular carburetor.

Carb. Code	High Alt. Jet Part Number	Min. Altitude
16100-000015	16100-000042	3000-6000 ft. (914.4-1828.8 m)
	16100-000040	6000-8000 ft. (1828.8-2438.4 m)

WARNING

Operation using the alternative main jet at elevations lower than the recommended minimum altitude can damage the engine. For operation at lower elevations, the originally supplied standard main jet must be used. Operating the engine with the wrong engine configuration at a given altitude may increase its emissions and decrease fuel efficiency and performance.

MAINTENANCE

Make certain that the generator is kept clean and stored properly. Only operate the unit on a flat, level surface in a clean, dry operating environment. DO NOT expose the unit to extreme conditions, excessive dust, dirt, moisture or corrosive vapors.

⚠ WARNING

Never operate a damaged or defective generator.

⚠ WARNING

Improper maintenance will void your warranty.

NOTICE

For Emission control devices and systems, read and understand your responsibilities for service as stated in the Emission Control Warranty Statement of this manual.

The owner/operator is responsible for all periodic maintenance.

Complete all scheduled maintenance in a timely manner.

Correct any issue before operating the generator.

For service or parts assistance, contact our Technical Support Team at 1-877-338-0999.

Cleaning the Generator

⚠ CAUTION

DO NOT spray generator directly with water.

Water can enter the generator through the cooling slots and damage the generator windings. It can also contaminate the fuel system.

1. Use a damp cloth to clean exterior surfaces of the generator.
2. Use a soft bristle brush to remove dirt and oil.
3. Use an air compressor (25 PSI) to clear dirt and debris from the generator.
4. Inspect all air vents and cooling slots to ensure that they are clean and unobstructed.

To prevent accidental starting, remove and ground the spark plug wire before performing any service.

Changing the Engine Oil

Change oil when the engine is warm. Refer to the oil specification to select the proper grade for your operating environment.

1. Remove the oil drain bolt with a 12 mm socket (not included) and extension.

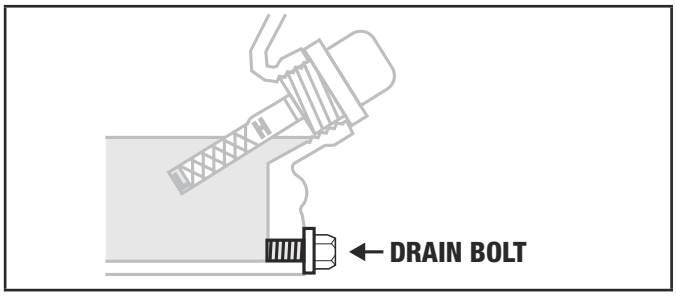

2. Allow the oil to drain completely into an appropriate container.

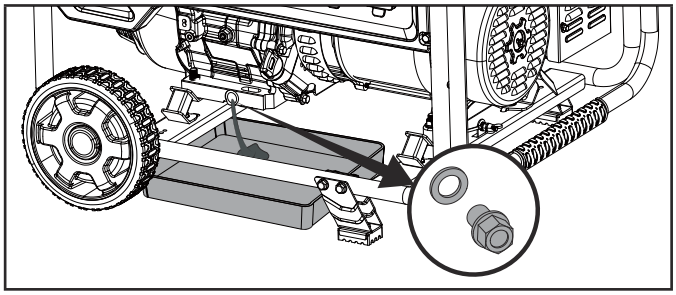

3. Replace the oil drain bolt.
4. Add oil according to *Add Engine Oil* in *Assembly* section. DO NOT OVERFILL. Oil not included for routine maintenance.
5. Dispose of used oil at an approved waste management facility.

NOTICE

Once oil has been added, a visual check should show oil about 1-2 threads from running out of the fill hole. If using the dipstick to check oil level, DO NOT screw in the dipstick while checking.

Cleaning and Adjusting the Spark Plug

1. Remove the spark plug cable from the spark plug.
2. Use a spark plug socket tool (not included), or a 13/16 in. (21 mm) socket (not included) to remove the plug.

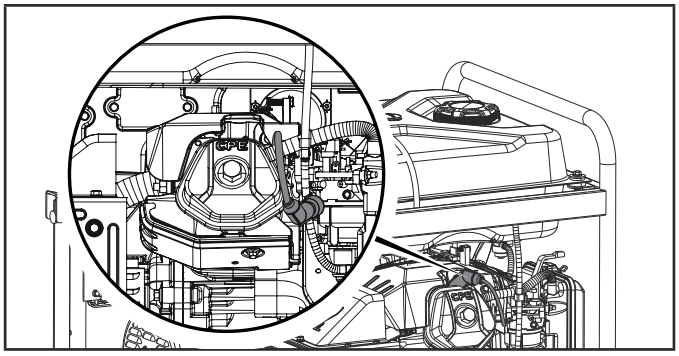

3. Inspect the electrode on the plug. It must be clean and not worn to produce the spark required for ignition.

4. Make certain the spark plug gap is 0.028-0.031 in. (0.7-0.8 mm).

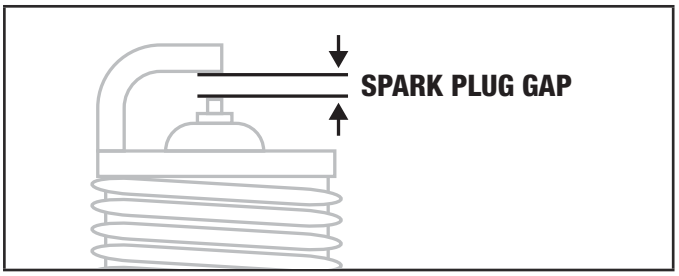

5. Refer to the spark plug types in *Specifications* when replacing the plug.
6. Firmly re-install the plug.
7. Attach the spark plug cable to the spark plug.

Cleaning the Air Filter

1. Remove the snap-on cover holding the air filter to the assembly.

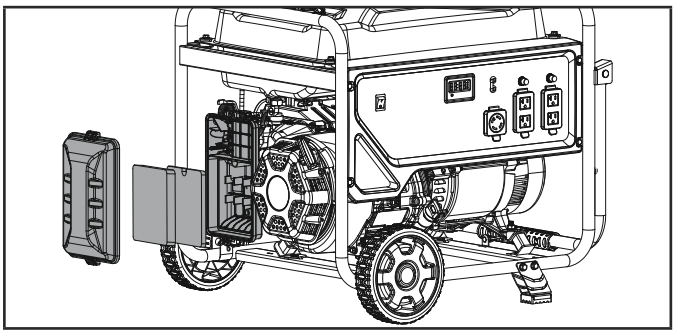

2. Remove the foam element.
3. Wash in liquid detergent and water. Squeeze thoroughly dry in a clean cloth.
4. Saturate in clean engine oil.
5. Squeeze in a clean, absorbent cloth to remove all excess oil.
6. Place the filter in the assembly.
7. Reattach the air filter cover and snap in place.

Cleaning the Spark Arrestor

1. Allow the engine to cool completely before servicing the spark arrestor.
2. Remove the screws holding the cover plate which retains the spark arrestor to the muffler.
3. Remove the spark arrestor screen.
4. Carefully remove the carbon deposits from the spark arrestor screen with a wire brush.

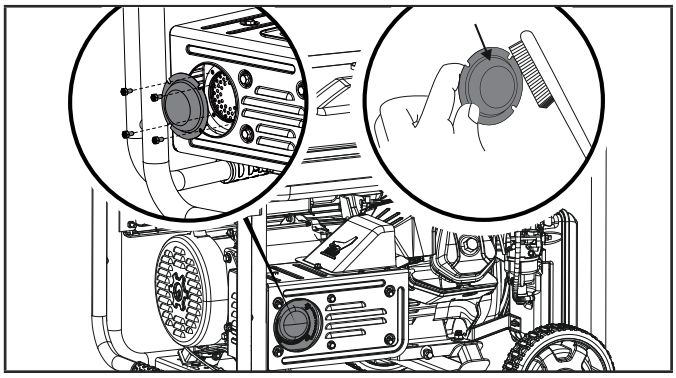

5. Replace the spark arrestor if it is damaged.
6. Position the spark arrestor on the muffler and attach with the screws removed in step 2.

⚠ CAUTION

Failure to clean the spark arrestor will result in poor engine performance.

NOTICE

Federal and local laws and administrative requirements indicate when and where spark arrestors are required. When ordered, spark arrestors are required for operation of this generator in National Forest lands. In California, this generator must not be used on any forest-covered land, brush-covered land, or grass-covered land unless the engine is equipped with a spark arrestor.

Adjusting the Governor

⚠ WARNING

Tampering with the factory set governor will void your warranty.

The air-fuel mixture is not adjustable. Tampering with the governor can damage your generator and your electrical devices and will void your warranty. Contact our Technical Support Team at 1-877-338-0999 for all other service and/or adjustment needs.

Maintenance Schedule

Follow the service intervals indicated in the following maintenance schedule.

Service your generator more frequently when operating in adverse conditions.

Contact our Technical Support Team at 1-877-338-0999 to locate the nearest CPE certified service dealer for your generator or engine maintenance needs.

EVERY 8 HOURS OR PRIOR TO EACH USE

- ☐ Check oil level
- ☐ Clean around air intake and muffler

FIRST 5 HOURS (BREAK IN)

- ☐ Change oil

EVERY 50 HOURS OR ANNUALLY

- ☐ Clean air filter
- ☐ Change oil if operating under heavy load or in hot environments

EVERY 100 HOURS OR ANNUALLY

- ☐ Change oil
- ☐ Clean/adjust spark plug
- ☐ Clean spark arrestor
- ☐ Clean fuel valve filter*

EVERY 250 HOURS

- ☐ Clean combustion chamber*
- ☐ Check/adjust valve clearance*

EVERY 3 YEARS

- ☐ Replace fuel line*

** To be performed by knowledgeable, experienced owners or CPE certified service centers.*

STORAGE

⚠ WARNING

To avoid accidental or unintended ignition of your generator during periods of storage, the following precautions should be followed:

– When storing the generator make sure the engine switch and fuel valve are set to the "OFF" position.

Short Term Storage (up to 30 days)

Ethanol blended gasoline may gum up and clog the carburetor if the generator is not run or carburetor drained within 4 weeks.

1. Be sure all appliances are disconnected from the generator.
2. Start the generator as instructed in *Starting the Engine* section.
3. Turn the fuel valve to the "OFF" position.
4. Let the engine run until fuel starvation has stopped the engine. This usually takes a few minutes.
5. Move the engine switch to the "OFF" position.

Mid Term Storage (30 days – 1 year)

Ethanol blended gasoline in the tank has a maximum shelf life of up to 1 year with the addition of a properly formulated fuel stabilizer and stored in a cool, dry place.

1. Be sure all appliances are disconnected from the generator.
2. Add a properly formulated fuel stabilizer to the gasoline tank.
3. Turn the fuel valve to the "ON" position.
4. Start and run the generator for 10 minutes so the treated gasoline cycles through the fuel system.
5. **Option 1: Drain Gasoline from Carburetor**

   5a. Turn engine switch to the "OFF" position and allow generator to cool completely before continuing.

   5b. Turn the fuel valve to the "OFF".

   5c. Use the drain bolt on the carburetor to empty any excess gasoline from the carburetor into an appropriate container. Use a funnel (and appropriate hose if necessary) under the carburetor drain bolt to avoid spillage.

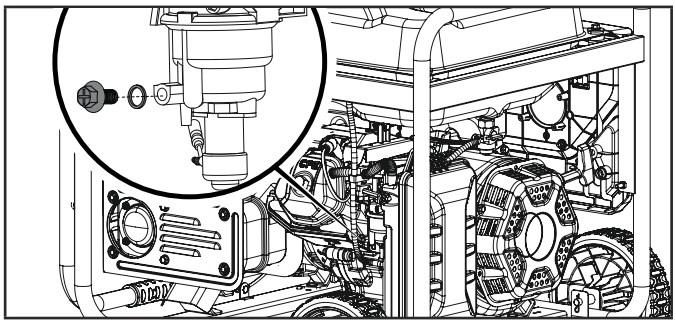

   5d. When gasoline stops flowing from the carburetor, replace and tighten the carburetor drain bolt and be sure to properly dispose of the drained gasoline according to local regulations or guidelines.

6. **Option 2: Run Dry**

   6a. With the generator running, turn the fuel valve to the "OFF" position and allow the generator to run until the engine stops from complete fuel starvation. This may take a few minutes.

   6b. Turn engine switch to the "OFF" position and allow generator to cool completely before continuing.

7. Remove the spark plug cap and spark plug and pour about a tablespoon of oil into the cylinder.
8. Pull the recoil cord slowly to crank the engine to distribute the oil and lubricate the cylinder.
9. Install the spark plug and spark plug cap.

10. Clean the generator according to *Cleaning the Generator*.
11. Store the generator in a cool, dry place out of direct sunlight.

Long Term Storage (over 1 year)

For storage over 1 year, the gasoline tank and carburetor must be completely drained of gasoline.

1. The generator is to be OFF and all appliances disconnected.
2. Turn the fuel valve to the “ON” position.
3. Use the drain bolt on the carburetor to empty any excess gasoline from the gasoline tank and carburetor into an appropriate container. Use a funnel (and appropriate hose if necessary) under the carburetor drain bolt to avoid spillage.
4. When gasoline stops flowing from the carburetor, replace and tighten the carburetor drain bolt and be sure to properly dispose of the drained gasoline according to local regulations or guidelines.
5. Turn the fuel valve to the “OFF” position.
6. Follow steps 7-11 according to *Mid Term Storage*.

Removing from Storage

NOTICE

If the generator has been improperly stored for a period longer than 30 days with ethanol blended gasoline in the gasoline tank and/or carburetor, all fuel must be drained and the carburetor must be thoroughly cleaned of ethanol build up. This process involves technically advanced tasks. For assistance please call our Technical Support Team at 1-877-338-0999.

If the gasoline tank and carburetor were properly emptied of all ethanol blended gasoline prior to the generator being stored, follow the below steps when removing from storage.

1. Be sure the engine switch is in the “OFF” position.
2. Add gasoline to the generator according to *Add Fuel.*
3. Turn the fuel valve to the “ON” position.
4. After 5 minutes check the carburetor and air filter areas for any leaking gasoline. If any leaks are found, the carburetor will need to be disassembled and cleaned or replaced. If no gasoline leaks are found, turn the fuel valve to the “OFF” position.
5. Check engine oil level and add clean, fresh oil if needed. See *Oil Specifications* for proper oil type.
6. Check and clear air filter of any obstructions such as bugs or cobwebs. If necessary, clean air filter according to *Cleaning the Air Filter*.
7. Start the generator according to *Starting the Engine*.

SPECIFICATIONS

Generator Specifications

Generator Model	201492
Start Type	Manual
Watts (Starting/Running)	7850/6250
Volts AC	120/240
AC Amps @ 120V	52.1
AC Amps @ 240V	26
Frequency	60 Hz
Phase	Single
Grounding Type	Neutral Bonded to Frame
Weight	166 lb. (75.5 kg)
Length	28.2 in. (71.6 cm)
Width	27.2 in. (69 cm)
Height	25 in. (63.5 cm)

Engine Specifications

Model	R390P
Displacement	389 cc
Type	4-Stroke OHV

Spark Plug

OEM Type	F6RTC
Replacement Type	NGK BPR6ES or equivalent
Gap	0.028-0.031 in. (0.7-0.8 mm)

Valve

Intake Clearance	0.0039-0.0059 in. (0.1-0.15 mm)
Exhaust Clearance	0.0059-0.0079 in. (0.15-0.2 mm)

NOTICE

A technical bulletin regarding valve adjustment procedures is available at www.championpowerequipment.com.

Oil Specifications

DO NOT OVERFILL.

Type	*See following chart
Capacity	1.2 US qt. (1100 mL)

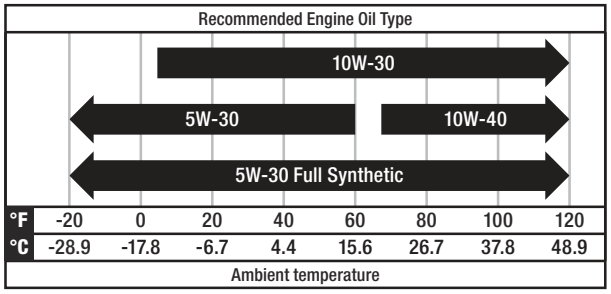

NOTICE

Temperature will affect engine oil and engine performance. Change the type of engine oil used based on temperature shown in the *"Recommended Engine Oil Type"* table.

Fuel Specifications

Use unleaded gasoline with a minimum octane rating of 87 and an ethanol content of 10% or less by volume. DO NOT USE E15 or E85. DO NOT OVERFILL.

Gasoline Capacity	7.7 gal. (29.1 L)

Temperature Specifications

Starting Temperature Range (°F/°C)	5 to 104/-15 to 40

NOTICE

An important message about temperature: Your product is designed and rated for continuous operation at ambient temperatures up to 104°F (40°C). When needed, it may be operated at temperatures ranging from 5°F (-15°C) to 122°F (50°C) for short periods of time. If exposed to temperatures outside this range during storage, it should be brought back within this range before operation. In any event, the product must always be operated outdoors, in a well-ventilated area and away from doors, windows and vents.

TROUBLESHOOTING

Problem	Cause	Solution
Generator will not start.	No fuel.	Add fuel.
	Faulty spark plug.	Clean and adjust spark plug or replace.
	Low oil level.	Fill crankcase to the proper level.
		Place generator on a flat, level surface.
	Spark plug wire loose.	Attach wire to spark plug.
	Fuel valve is closed.	Open fuel valve.
	Engine switch OFF.	Press engine switch ON.
	Old fuel or water in fuel.	Drain fuel and replace with fresh fuel.
	Flooded with fuel.	Let unit stand for 10 mins.
	CO Shield® module has been removed or tampered with.	Re-install module or contact technical support.
Generator starts but runs roughly.	Choke in the wrong position.	Move choke until it stops under RUN position or push in completely.
	Dirty air filter.	Clean or replace air filter.
	Dirty fuel valve.	Clean the fuel valve.
	Clogged spark arrestor.	Clean spark arrestor.
Generator shuts down during operation.	Out of fuel.	Fill fuel tank.
	Low oil level.	Fill crankcase to the proper level. Place generator on a flat, level surface.
	If equipped, when CO Shield® shutoffs occur due to accumulating carbon monoxide (CO) and if the red LED light blinks on the panel.	Move generator to an open, outdoor area. Point exhaust away from people and buildings. Move to fresh air and get medical help if sick, dizzy, or weak. Make sure there are no objects creating obstructions within 5 feet of the generator. Obstructions in the vicinity of the generator may trap carbon monoxide emissions near the generator and cause the engine to shutoff. If the generator's exhaust is facing into the wind, the exhaust may be blown back into the generator's operating area, creating an accumulation of CO emissions and triggering an engine shutoff. To avoid an engine shutoff, turn the generator 45° in either direction to allow the exhaust emissions to blow away from the generator. If engine shutoff events continue, readjust and align the exhaust with the wind direction to blow away from the generator.
	If equipped, when CO Shield® shutoffs occur due to system fault and if the yellow LED light blinks on the panel.	Start by confirming yellow LED light blinks when/if generator shuts off. If CO Shield® continues to sense the fault and shuts off, contact technical support.
	Clogged spark arrestor.	Clean spark arrestor.

Problem	Cause	Solution
Generator starts and shuts off right away.	If equipped, when CO Shield® shutoffs occur due to accumulating carbon monoxide (CO) and if the red LED light blinks on the panel.	Move generator to an open, outdoor area. Point exhaust away from people and buildings. Move to fresh air and get medical help if sick, dizzy, or weak. Make sure there are no objects creating obstructions within 5 feet of the generator. Obstructions in the vicinity of the generator may trap carbon monoxide emissions near the generator and cause the engine to shutoff. If the generator's exhaust is facing into the wind, the exhaust may be blown back into the generator's operating area, creating an accumulation of CO emissions and triggering an engine shutoff. To avoid an engine shutoff, turn the generator 45° in either direction to allow the exhaust emissions to blow away from the generator. If engine shutoff events continue, readjust and align the exhaust with the wind direction to blow away from the generator.
	If equipped, when CO Shield® shutoffs occur due to system fault and if the yellow LED light blinks on the panel.	Start by confirming yellow LED light blinks when/ if generator shuts off. If CO Shield® continues to sense the fault and shuts off, contact technical support.
Generator cannot supply enough power or overheating.	Generator is overloaded.	Review load and adjust. See "Connecting Electrical Loads."
	Dirty air filter.	Clean or replace air filter.
	Choke in wrong position.	Move choke until it stops under RUN position or push in completely.
Generator is running but no AC output.	Poor cord connection.	Check all connections.
	Circuit breaker is open.	Reset circuit breaker. Check all circuit breakers.
	Faulty brush assembly.	Replace brush assembly (Service Center).
	Faulty AVR (auto voltage regulator).	Replace AVR (Service Center).
	Loose wiring.	Inspect and tighten wiring connections.
	GFCI tripped.	Reset GFCI receptacle breakers by first pushing the TEST button then the RESET button until green LED illuminates. Contact the help line.
	Other.	Contact the help line.
Generator hunts or falters.	Engine governor defective.	Contact the help line.
	Dirty fuel valve.	Clean the fuel valve.
	Carburetor is dirty and running lean.	Contact the help line.
	Choke in wrong position.	Move choke until it stops under RUN position or push in completely.

Problem	Cause	Solution
Repeated circuit breaker tripping.	Overload.	Review load and adjust. See “Connecting Electrical Loads.”
	Faulty power cords or device.	Check for damaged, bare or frayed wires. Replace defective device.
	Circuit breaker still too hot.	Let unit sit for 5 mins.

For other issues and technical support:

Technical Support Team
Toll Free 1-877-338-0999
support@championpowerequipment.com

WARRANTY*

CHAMPION POWER EQUIPMENT
3 YEAR LIMITED WARRANTY

Warranty Qualifications

To register your product for warranty and FREE lifetime call center technical support please visit:
https://www.championpowerequipment.com/register

To complete registration you will need to include a copy of the purchase receipt as proof of original purchase. Proof of purchase is required for warranty service. Please register within ten (10) days from date of purchase.

Repair/Replacement Warranty

CPE warrants to the original purchaser that the mechanical and electrical components will be free of defects in material and workmanship for a period of three years (parts and labor) from the original date of purchase and 270 days (parts and labor) for commercial and industrial use. Transportation charges on product submitted for repair or replacement under this warranty are the sole responsibility of the purchaser. This warranty only applies to the original purchaser and is not transferable.

Do Not Return The Unit To The Place Of Purchase

Contact CPE's Technical Service and CPE will troubleshoot any issue via phone or e-mail. If the problem is not corrected by this method, CPE will, at its option, authorize evaluation, repair or replacement of the defective part or component at a CPE Service Center. CPE will provide you with a case number for warranty service. Please keep it for future reference. Repairs or replacements without prior authorization, or at an unauthorized repair facility, will not be covered by this warranty.

Warranty Exclusions

This warranty does not cover the following repairs and equipment:

Normal Wear

Products with mechanical and electrical components need periodic parts and service to perform well. This warranty does not cover repair when normal use has exhausted the life of a part or the equipment as a whole.

Installation, Use and Maintenance

This warranty will not apply to parts and/or labor if the product is deemed to have been misused, neglected, involved in an accident, abused, loaded beyond the product's limits, modified, installed improperly or connected incorrectly to any electrical component. Normal maintenance is not covered by this warranty and is not required to be performed at a facility or by a person authorized by CPE.

Other Exclusions

This warranty excludes:

- Cosmetic defects such as paint, decals, etc.
- Wear items such as filter elements, o-rings, etc.
- Accessory parts such as starting batteries, and storage covers.
- Failures due to acts of God and other force majeure events beyond the manufacturer's control.
- Problems caused by parts that are not original Champion Power Equipment parts.
- Used for prime power in place of existing utility power (where utility power is present) or in place of utility power where utility power service does not normally exist. Prime power includes any application that does not use the utility grid for electric power (example: solar power).

Limits of Implied Warranty and Consequential Damage

Champion Power Equipment disclaims any obligation to cover any loss of time, use of this product, freight, or any incidental or consequential claim by anyone from using this product. THIS WARRANTY AND THE ATTACHED U.S. EPA and/or CARB EMISSION CONTROL SYSTEM WARRANTIES (WHEN APPLICABLE) ARE IN LIEU OF ALL OTHER WARRANTIES, EXPRESS OR IMPLIED, INCLUDING WARRANTIES OF MERCHANTABILITY OR FITNESS FOR A PARTICULAR PURPOSE.

A unit provided as an exchange will be subject to the warranty of the original unit. The length of the warranty governing the exchanged unit will remain calculated by reference to the purchase date of the original unit.

This warranty gives you certain legal rights which may change from state to state or province to province. Your state or province may also have other rights you may be entitled to that are not listed within this warranty.

Contact Information

Address

Champion Power Equipment, Inc.
6370 S Pioneer Way, Unit 101
Las Vegas, NV 89113 USA
www.championpowerequipment.com

Customer Service

Toll Free: 1-877-338-0999
info@championpowerequipment.com
Fax no.: 1-562-236-9429

Technical Service

Toll Free: 1-877-338-0999
tech@championpowerequipment.com
❗ EMERGENCY 24 HOUR SUPPORT: 1-562-204-1188

*Except as otherwise stipulated in any of the following enclosed Emission Control System Warranties (when applicable) for the Emission Control System: U.S. Environment Protection Agency (EPA) and/or California Air Resources Board (CARB).

CHAMPION POWER EQUIPMENT, INC. (CPE)
AND THE UNITED STATES ENVIRONMENTAL PROTECTION AGENCY (U.S. EPA)
EMISSION CONTROL SYSTEM WARRANTY

Your Champion Power Equipment (CPE) engine complies with U.S. EPA emissions regulations.

YOUR WARRANTY RIGHTS AND OBLIGATIONS:

The US EPA and CPE are pleased to explain the Federal Emission Control Systems Warranty on your 2026 small off-road engine and engine powered equipment. New engines and equipment must be designed, built and equipped, at the time of sale, to meet U.S. EPA regulations for small off-road engines. CPE warrants the emission control system on your small off-road engine and equipment for the period of time listed below, provided there has been no abuse, neglect, unapproved modification, or improper maintenance of your equipment.

Your emission control system may include parts such as the carburetor, fuel-injection system, the ignition system, catalytic converter and fuel lines. Also included may be hoses, belts, connectors and other emission related assemblies. Where a warrantable condition exits, CPE will repair your small off-road engine at no cost to you including diagnosis, parts and labor.

MANUFACTURER'S EMISSION CONTROL SYSTEM WARRANTY COVERAGE:

This emission control system is warranted for two years, subject to provisions set forth below. If, during the warranty period, an emission related part on your engine is defective in materials or workmanship, the part will be repaired or replaced by CPE.

OWNER'S WARRANTY RESPONSIBILITIES:

As the small off-road engine owner, you are responsible for the performance of the required maintenance listed in your Owner's Manual. CPE recommends that you retain all your receipts covering maintenance on your small off-road engine, but CPE cannot deny warranty solely for the lack of receipts or for your failure to ensure the performance of all scheduled maintenance.

As the small off-road engine owner, you should however be aware that CPE may deny you warranty coverage if your small, off-road engine or a part has failed due to abuse, neglect, improper maintenance or unapproved modifications.

You are responsible for presenting your small off-road engine to an Authorized CPE service outlet or alternate service outlet as described in (3)(f.) below, CPE dealer or CPE, Las Vegas, NV. as soon as a problem exists. The warranty repairs should be completed in a reasonable amount of time, not to exceed 30 days.

If you have any questions regarding your warranty rights and responsibilities, you should contact:

Champion Power Equipment, Inc.
Customer Service
6370 S Pioneer Way, Unit 101
Las Vegas, NV 89113
1-877-338-0999
tech@championpowerequipment.com

EMISSION CONTROL SYSTEM WARRANTY

The following are specific provisions relative to your Emission Control System (ECS) Warranty Coverage.

1. **APPLICABILITY:** This warranty shall apply to 1997 and later model year small off-road engines. The ECS Warranty Period shall begin on the date the new engine or equipment is delivered to its original, end-use purchaser, and shall continue for 24 consecutive months thereafter.

2. **GENERAL EMISSIONS WARRANTY COVERAGE**
   CPE warrants to the original, end-use purchaser of the new engine or equipment and to each subsequent purchaser that the ECS when installed is:

   2a. Designed, built and equipped so as to conform to U.S. EPA emissions standards for spark-ignited engines at or below 19 kilowatts.

   2b. Free from defects in materials and workmanship that cause the failure of a warranted part to be identical in all material respects to the part as described in the engine manufacturer's application for certification for a period of two years.

3. **THE WARRANTY ON EMISSION-RELATED PARTS WILL BE INTERPRETED AS FOLLOWS:**

   3a. Any warranted part that is not scheduled for replacement as required maintenance in the Operator's Manual shall be warranted for the ECS Warranty Period. If any such part fails during the ECS Warranty Period, it shall be repaired or replaced by CPE according to Subsection "d" below. Any such part repaired or replaced under the ECS Warranty shall be warranted for any remainder of the ECS Warranty Period.

   3b. Any warranted, emissions-related part which is scheduled only for regular inspection as specified in the Operator's Manual shall be warranted for the ECS Warranty Period. A statement in such written instructions to the effect of "repair or replace as necessary", shall not reduce the ECS Warranty Period. Any such part repaired or replaced under the ECS Warranty shall be warranted for the remainder of the ECS Warranty Period.

   3c. Any warranted, emissions-related part which is scheduled for replacement as required maintenance in the Operator's Manual shall be warranted for the period of time prior to the first scheduled replacement point for that part. If the part fails prior to the first scheduled replacement, the part shall be repaired or replaced by CPE according to Subsection "d" below. Any such emissions-related part repaired or replaced under the ECS Warranty, shall be warranted for the remainder of the ECS Warranty Period prior to the first scheduled replacement point for such emissions-related part.

   3d. Repair or replacement of any warranted, emissions-related part under this ECS Warranty shall be performed at no charge to the owner at a CPE Authorized Service Outlet.

   3e. The owner shall not be charged for diagnostic labor which leads to the determination that a part covered by the ECS Warranty is in fact defective, provided that such diagnostic work is performed at a CPE Authorized Service Outlet.

   3f. CPE shall pay for covered emissions warranty repairs at non-authorized service outlets under the following circumstances:

      i. The service is required in a population center with a population over 100,000 according to U.S. Census 2000 without a CPE Authorized Service Outlet AND

      ii. The service is required more than 100 miles from a CPE Authorized Service Outlet. The 100 mile limitation does not apply in the following states: Alaska, Arizona, Colorado, Hawaii, Idaho, Montana, Nebraska, Nevada, New Mexico, Oregon, Texas, Utah and Wyoming.

   3g. CPE shall be liable for damages to other original engine components or approved modifications proximately caused by a failure under warranty of an emission-related part covered by the ECS Warranty.

   3h. Throughout the ECS Warranty Period, CPE shall maintain a supply of warranted emission-related parts sufficient to meet the expected demand for such emission-related parts.

   3i. Any CPE Authorized and approved emission-related replacement part may be used in the performance of any ECS Warranty maintenance or repair and will be provided without charge to the owner. Such use shall not reduce CPE's warranty obligation.

   3j. Unapproved add-on or modified parts may not be used to modify or repair a CPE engine. Such use voids this ECS Warranty and shall be sufficient grounds for disallowing an ECS Warranty claim. CPE shall not be liable hereunder for failures of any warranted parts of a CPE engine caused by the use of such an unapproved add-on or modified part.

EMISSION-RELATED PARTS INCLUDE THE FOLLOWING: (using those portions of the list applicable to the engine)

Systems covered by this warranty	Parts Description
Fuel Metering System	Fuel regulator, Carburetor and internal parts
Air Induction System	Air cleaner, Intake manifold
Ignition System	Spark plug and parts, Magneto ignition system
Exhaust System	Exhaust manifold, catalytic converter
Miscellaneous Parts	Tubing, Fittings, Seals, Gaskets, and Clamps associated with these listed systems.
Evaporative Emissions	Fuel Tank, Fuel Cap, Fuel Lines (for liquid fuel and fuel vapors), Fuel Line Fittings, Clamps, Pressure Relief Valves, Control Valves, Control Solenoids, Electronic Controls, Vacuum Control Diaphragms, Control Cables, Control Linkages, Purge Valves, Gaskets, Liquid/Vapor Separator, Carbon Canister, Canister Mounting Brackets, Carburetor Purge Port Connector

TO OBTAIN WARRANTY SERVICE:

You must take your CPE engine or the product on which it is installed, along with your warranty registration card or other proof of original purchase date, at your expense, to any Champion Power Equipment dealer who is authorized by Champion Power Equipment, Inc. to sell and service that CPE product during his normal business hours. Alternate service locations defined in Section (3)(f.) above must be approved by CPE prior to service. Claims for repair or adjustment found to be caused solely by defects in material or workmanship will not be denied because the engine was not properly maintained and used.

If you have any questions regarding your warranty rights and responsibilities, or to obtain warranty service, please write or call Customer Service at Champion Power Equipment, Inc.

Champion Power Equipment, Inc.
6370 S Pioneer Way, Unit 101
Las Vegas, NV 89113
1-877-338-0999
Attn.: Customer Service
tech@championpowerequipment.com