OPERATOR'S MANUAL

MODEL #100729
24-INCH (61 CM) WALK BEHIND STRING TRIMMER

ACTIVATE YOUR WARRANTY

by registering your product:
championpowerequipment.com

SERIAL NO.

1·877·338·0999

or visit **championpowerequipment.com**

⚠ WARNING

To reduce the risk of injury, the user must read and understand the operator's manual before using this product. If you do not understand the warnings and instructions in the operator's manual, do not use this product.

SAVE THESE INSTRUCTIONS. This manual contains important safety precautions which should be read and understood before operating the product. Failure to do so could result in serious injury. This manual should remain with the product.

Specifications, descriptions and illustrations in this manual are as accurate as known at the time of publication, but are subject to change without notice.

5887-M-OP | REV 20251020 | EN

Champion Power Equipment, Inc.

TABLE OF CONTENTS

Introduction **3**

Safety Definitions **3**

Important Safety Instructions **4**

Fuel Safety 6
Safety and Dataplate Labels 8
Safety Symbols 10
Operation Symbols 12
Quick Start Label Symbols 12

Controls and Features **13**

String Trimmer 13
Tools Required 14
Industry Canada: CAN ICES-002(B) / NMB-002(B) 14

Assembly **15**

Unpacking 15
Handle Assembly 15
Trimmer Guard Installation 15
Replacing or Installing the Trimmer Line 16

Operation **17**

Add Engine Oil 17
Add Fuel 18
Starting the Engine 19
Stopping the Engine 20
Engaging and Disengaging the Trimmer Head 20
Before Each Use Inspect the String Trimmer 21
Adjust the Handle Height 21
Adjust Trimmer Head Height 22
Operation at High Altitude 22

Maintenance **22**

Cleaning the String trimmer 23
Engine Oil Services 23
Cleaning and Adjusting the Spark Plug(s) 24
Cleaning the Air Filter 24
Cleaning the Spark Arrestor 25
Belt Tension Adjustment 25
Replace the Belt 25
Check or Add Gearbox Grease 26
Adjusting the Governor 26
Maintenance Schedule 27

Storage **27**

Short Term Engine Storage (Up to 30 Days) 27
Long Term Engine Storage (30 Days – 1 Year) 27

Specifications **29**

String Trimmer Specifications 29
Engine Specifications 29
Oil Specifications 29
Fuel Specifications 29
Temperature Specifications 29

Troubleshooting **30**

FOR PARTS BREAKDOWN

Search by model number at
championpowerequipment.com

INTRODUCTION

Congratulations on your purchase of a Champion Power Equipment (CPE) product. CPE designs, builds, and supports all of our products to strict specifications and guidelines. With proper product knowledge, safe use, and regular maintenance, this product should bring years of satisfying service.

Every effort has been made to ensure the accuracy and completeness of the information in this manual at the time of publication, and we reserve the right to change, alter and/or improve the product and this document at any time without prior notice.

CPE highly values how our products are designed, manufactured, operated, and serviced as well as providing safety to the operator and those around the string trimmer. Therefore, it is IMPORTANT to review this product manual and other product materials thoroughly and be fully aware and knowledgeable of the assembly, operation, dangers and maintenance of the product before use. Fully familiarize yourself, and make sure others who plan on operating the product fully familiarize themselves too, with the proper safety and operation procedures before each use. Please always exercise common sense and always err on the side of caution when operating the product to ensure no accident, property damage, or injury occurs. We want you to continue to use and be satisfied with your CPE product for years to come.

When contacting CPE about parts and/or service, you will need to supply the complete model and serial numbers of your product. Transcribe the information found on your product's nameplate label to the table below

CPE TECHNICAL SUPPORT TEAM
1-877-338-0999
MODEL NUMBER
100729
SERIAL NUMBER
DATE OF PURCHASE
PURCHASE LOCATION

SAFETY DEFINITIONS

The purpose of safety symbols is to attract your attention to possible dangers. The safety symbols, and their explanations, deserve your careful attention and understanding. The safety warnings do not by themselves eliminate any danger. The instructions or warnings they give are not substitutes for proper accident prevention measures.

⚠ DANGER

DANGER indicates a hazardous situation which, if not avoided, will result in death or serious injury.

⚠ WARNING

WARNING indicates a hazardous situation which, if not avoided, could result in death or serious injury.

⚠ CAUTION

CAUTION indicates a hazardous situation which, if not avoided, could result in minor or moderate injury.

NOTICE

NOTICE indicates information considered important, but not hazard-related (e.g., messages relating to property damage).

IMPORTANT SAFETY INSTRUCTIONS

⚠ WARNING

Cancer and Reproductive Harm – www.P65Warnings.ca.gov

⚠ DANGER

The engine exhaust contains carbon monoxide, a colorless, odorless, poisonous gas. Breathing carbon monoxide will cause nausea, dizziness, fainting or death. If you start to feel dizzy or weak, get to fresh air immediately.

OPERATE OUTDOORS ONLY IN A WELL-VENTILATED AREA AND POINT EXHAUST AWAY.

DO NOT operate inside any building, garages, basements, crawlspaces, sheds, enclosures or compartments.

DO NOT allow exhaust fumes to enter a confined area through windows, doors, vents or other openings.

⚠ DANGER

Using an engine indoors **CAN KILL YOU IN MINUTES**. Engine exhaust contains carbon monoxide. This is a poison you cannot see or smell.

NEVER use inside a home or garage, **EVEN IF** doors and windows are open.

ONLY use **OUTSIDE** and far away from windows, doors, and vents.

Install battery-operated carbon monoxide alarms or plug-in carbon monoxide alarms with battery back-up according to the manufacturer's instructions.

⚠ DANGER

Rotating parts can entangle hands, feet, hair, clothing and/or accessories. Traumatic amputation or severe laceration can result.

Keep hands and feet away from rotating parts.

Tie up long hair and remove jewelry.

Operate equipment with guards in place.

DO NOT wear loose-fitting clothing, dangling drawstrings or items that could become caught.

⚠ DANGER

DO NOT allow untrained individuals or children to use this unit.

⚠ WARNING

- Maintain a firm grip on the handle with both hands while using the string trimmer.
- Always wear eye protection with side shields marked to comply with ANSI Z87.1. Failure to do so could result in objects being thrown into your eyes and other possible serious injuries.
- Always wear sound protection (ear mufflers or ear plugs) to protect your hearing. Long term string trimmer noise exposure may damage your hearing.
- Always wear sound protection (ear mufflers or ear plugs) to reduce the risk of hearing loss associated with long term engine sound level(s).
- To help avoid trimmer line contact or a thrown object injury, stay in operator zone behind handles and keep children, bystanders, helpers and pets at least 50' (15m) from string trimmer while it is in operation. Stop machine if anyone enters area.
- Wear heavy long pants, long sleeves, boots, and gloves. Do not wear loose fitting clothing, short pants, sandals, jewelry of any kind, or go barefoot.
- To reduce the risk of injury associated with objects being drawn into rotating parts, do not wear loose clothing, scarves, neck chains, and the like.
- Secure long hair so it is above shoulder level to prevent entanglement in any rotating parts.
- Do not operate this unit when you are tired, ill, or under the influence of alcohol, drugs, or medication.
- Do not operate in poor lighting.
- Always inspect the unit before each use for loose fasteners, fuel leaks, etc. Replace damaged parts.
- Wear a face filter mask in dusty conditions to reduce the risk of injury associated with the inhalation of dust.
- Thoroughly inspect the area where the equipment is to be used. Remove all stones, sticks, wire, bones, toys and other foreign objects, which could be tripped over or picked up and thrown by the string trimmer. Thrown objects can cause serious personal injury.

⚠ WARNING

- Plan your trimming pattern to avoid discharge of material toward roads, sidewalks, bystanders and the like. Also, avoid discharging material against a wall or obstruction, which may cause discharged material to ricochet back toward the operator.
- Keep firm footing and balance. Do not overreach. Overreaching can result in loss of balance or exposure to hot surfaces.
- The engine is equipped with a spark arrestor. Never operate the unit without a spark arrestor screen.
- Inspect the unit before each use for loose fasteners, fuel leaks, etc. Replace damaged parts.
- Many injuries occur as a result of the string trimmer being pulled over the foot during a fall caused by slipping or tripping. Do not hold on to the string trimmer if you are falling; release the handle immediately.
- Do not put hands or feet near or under rotating parts. Keep clear of discharge area at all times as the rotating spindle and trimmer lines can cause injury.
- Never operate the string trimmer without proper shields, guards, control lever or other safety protective devices in place and working.
- Never operate the string trimmer with damaged safety devices. Failure to do so, can result in personal injury.
- Many injuries occur as a result of the string trimmer being pulled over the foot during a fall caused by slipping or tripping. Do not hold on to the string trimmer if you are falling; release the handle immediately.
- Never pull the string trimmer back toward you while you are walking. If you must back the string trimmer away from a wall or obstruction first look down and behind to avoid tripping and then follow these steps:

1. Step back from string trimmer to fully extend your arms.
2. Be sure you are well balanced with sure footing.
3. Pull the string trimmer back slowly, no more than half way toward you.
4. Repeat these steps as needed.

⚠ WARNING

- The control lever is a safety device. Never attempt to bypass its operation. Doing so makes the safety device inoperative and may result in personal injury through contact with the rotating trimmer line. The control lever must operate easily in both directions and automatically return to the disengaged position when released.
- Never operate the string trimmer in wet grass. Always be sure of your footing. A slip and fall can cause serious personal injury. If you feel you are losing your footing, release the control lever immediately and the spindle will stop rotating within three seconds.
- Operate only in daylight or good artificial light. Walk, never run.
- Stop the spindle when crossing gravel drives, walks or roads.
- If the equipment should start to vibrate abnormally, stop the engine and check immediately for the cause. Vibration is generally a warning of trouble.
- Shut the engine off and wait until the trimmer head comes to a complete stop before cleaning the discharge area. The trimmer head continues to rotate for a few seconds after the control lever is released. Never place any part of the body in the trimmer line area until you are sure the trimmer head has stopped rotating.
- Never operate string trimmer without proper shield, discharge cover, control lever or other safety protective devices in place and working. - Never operate string trimmer with damaged safety devices. Failure to do so can result in personal injury.
- Use only parts made for this machine by the manufacturer or identified by the manufacturer as acceptable aftermarket replacements. Failure to do so can result in personal injury.

⚠ WARNING

Sparks can result in fire or electrical shock.

When servicing the engine:

Disconnect the spark plug wire and place it where it cannot contact the plug or any other metal object.

DO NOT check for spark with the plug removed.

Use only approved spark plug testers.

⚠ WARNING

Running engines produce heat. Severe burns can occur on contact. Combustible material can catch fire on contact.

DO NOT touch hot surfaces.

Avoid contact with hot exhaust gases.

Allow equipment to cool before touching.

Maintain at least 3 ft. (91.4 cm) of clearance on all sides to ensure adequate cooling.

Maintain at least 5 ft. (1.5 m) of clearance from combustible materials.

⚠ WARNING

Rapid retraction of the recoil cord will pull hand and arm towards the engine faster than you can let go. Broken bones, fractures, bruises or sprains could result. Unintentional startup can result in entanglement, traumatic amputation or laceration.

When starting engine, pull the recoil cord slowly until resistance is felt and then pull rapidly to avoid kickback.

⚠ CAUTION

Prolonged exposure to vibrations, also known as vibration white finger, through use of gasoline-powered equipment, such as this edger, could cause blood vessel or nerve damage in fingers, hands, and joints. If symptoms occur such as numbness, or loss of feeling in the fingers, hands, or joints, discontinue the use of this edger and seek medical attention.

Fuel Safety

⚠ DANGER

GASOLINE AND GASOLINE VAPORS ARE HIGHLY FLAMMABLE AND EXPLOSIVE.

Fire or explosion can cause severe burns or death.

Gasoline and gasoline vapors:

- Gasoline is highly flammable and explosive.
- Gasoline can cause a fire or explosion if ignited.
- Gasoline is a liquid fuel but it's vapors can ignite.
- Gasoline is a skin irritant and needs to be cleaned up immediately if spilled on skin or clothes.
- Gasoline has a distinctive odor, this will help detect potential leaks quickly.
- Gasoline expands or contracts with ambient temperatures. Never fill the gasoline tank to full capacity, as gasoline needs room to expand when temperatures rise.
- In the case of any petroleum gasoline fire, flames should never be extinguished unless the fuel supply valve can be turned OFF. By not doing so, if a fire is extinguished and the supply of fuel is not turned OFF, an explosion hazard could be created.

⚠ WARNING

When adding or removing gasoline:

DO NOT light or smoke cigarettes.

Always turn the string trimmer off and let cool for minimum of two minutes before removing the gasoline cap. Afterwards, loosen gasoline cap to relieve pressure from the gasoline tank.

Only fill or drain gasoline outdoors in a well-ventilated area.

DO NOT pump gasoline directly into the string trimmer at the gas station. Always use an approved fuel container to transfer the fuel to the gasoline tank.

DO NOT overfill the gasoline tank.

Always keep gasoline away from sparks, open flames, pilot lights, heat and other sources of ignition.

Mix and store fuel in a container approved for gasoline.

⚠ WARNING

When starting the string trimmer:

DO NOT attempt to start a damaged engine.

Always make certain that the gasoline cap, air filter, spark plug, fuel lines and exhaust system are properly secured, connected and in place.

Always allow spilled gasoline to evaporate fully before attempting to start the engine.

Make certain that the string trimmer is resting firmly on level ground.

⚠ WARNING

When operating the string trimmer:

DO NOT move or tip the string trimmer during operation.

DO NOT tip the string trimmer or allow fuel or oil to spill.

⚠ WARNING

When storing the string trimmer:

Store away from sparks, open flames, pilot lights, heat and other sources of ignition.

Do not store the string trimmer or gasoline near furnaces, water heaters, or any other appliances that produce heat or have automatic ignitions.

⚠ WARNING

Never use a gasoline container, gasoline tank, or any other fuel item that is broken, cut, torn or damaged.

Safety and Dataplate Labels

These labels warn you of potential hazards that can cause serious injury. Read them carefully.

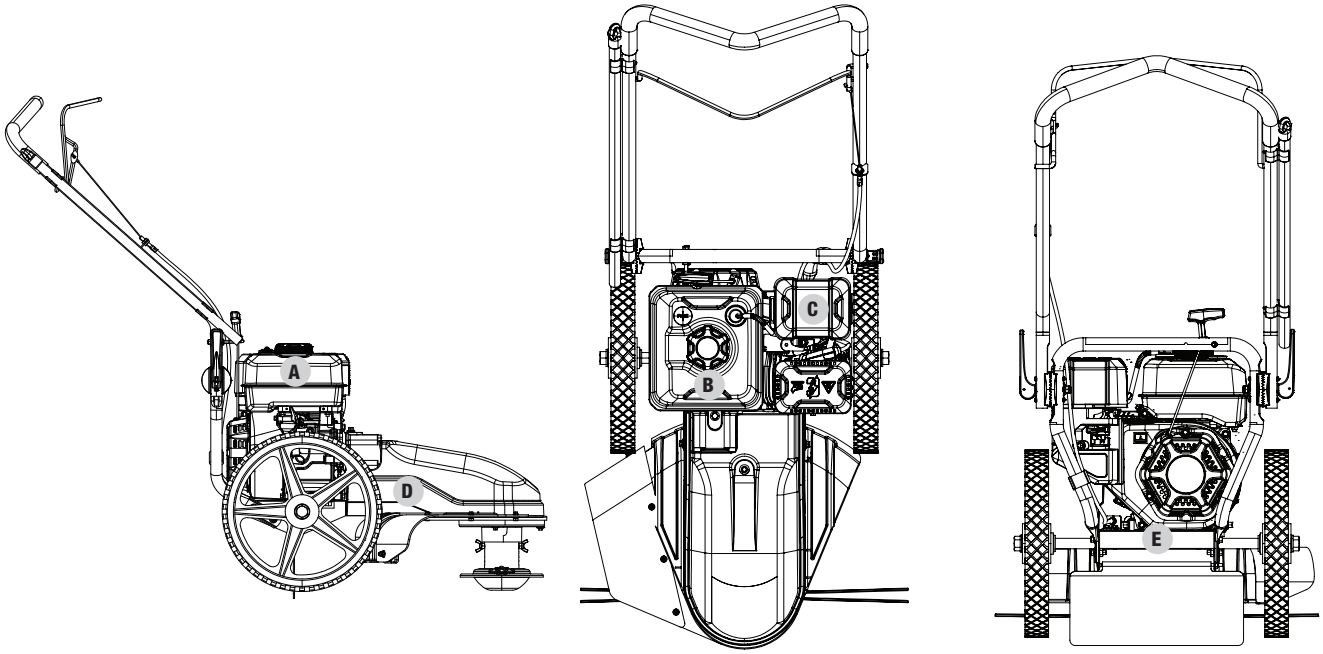

Side Top Back

	LABEL	DESCRIPTION
A		Engine Danger
B	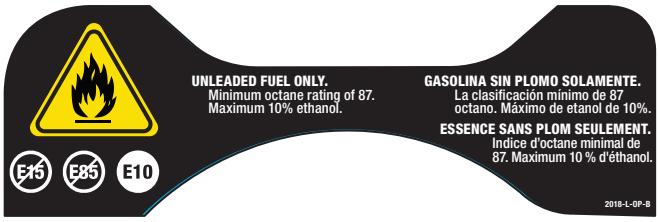	Fuel Requirements
C		Hot Surface Warning
D		Operation Danger

	LABEL	DESCRIPTION
E	SERIAL NO. N° DE SÉRIE XXXXXXXXXXXX CHAMPION POWER EQUIPMENT, INC. 6370 S PIONEER WAY, UNIT 101 LAS VEGAS, NV 89113 USA / É.-U. • 1-877-338-0999 WWW.CHAMPIONPOWEREQUIPMENT.COM MODEL MODÈLE 100729 8 17198 02380 9 REGISTER TO ACTIVATE YOUR WARRANTY ENREGISTREZ-VOUS POUR ACTIVEZ VOTRE GARANTIE 5904-L-PR-A	Dataplate

Safety Symbols

Some of the following symbols may be used on this product. Please study them and learn their meaning. Proper interpretation of these symbols will allow you to more safely operate the product.

SYMBOL	MEANING
	Read Operator's Manual. To reduce the risk of injury, user must read and understand operator's manual before using this product.
	Eye and Ear Protection. Always wear safety goggles or safety glasses with side shields, and as necessary a full face-shield as well as full ear protection when operating this product.
	Footwear. Always wear safety shoes or heavy boots when operating the machine.
	Gloves. Always wear nonslip, heavy-duty protective gloves when operating this product.
	Safety Alert. Precautions that involve your safety.
	Risk of Fire. Fuel and its vapors are extremely flammable and explosive. Fire can cause severe burns or death. Do not add fuel while the product is operating or still hot.
	Hot Surface. To reduce the risk of injury or damage, avoid contact with any hot surface
	Open Flame alert. Fuel and its vapors are extremely flammable and explosive. Keep fuel away from smoking, open flames, sparks, pilot lights, heat, and other ignition sources.

SYMBOL	MEANING
	Toxic Fumes. The engine exhaust from this product contains chemicals known to the state of California to cause cancer and birth defects and other reproductive harm. **Risk of Asphyxiation.** This engine emits carbon monoxide, an odorless, colorless poison gas. Breathing carbon monoxide can cause nausea, fainting or death. Use only in a well ventilated area.
	Clearance. Keep all objects including others at least 50 feet (15m) from this machine.
	Amputation Hazard. Rotating parts can entangle hands, feet, hair, clothing and/or accessories. Traumatic amputation or severe laceration can result.
	Thrown Objects. This machine may pick up and throw objects which can cause personal injury.
	Serious Personal Injury or Property Damage. Before inspecting, cleaning or servicing the machine, shut of the engine, wait for all moving parts to come to a complete stop, disconnect the spark plug wire and move it away from the spark plug.

Operation Symbols

Some of the following symbols may be used on this product. Please study them and learn their meaning. Proper interpretation of these symbols will allow you to more safely operate the product.

SYMBOL	MEANING
	Choke/Run
	Fuel Valve : CLOSED/OPEN

SYMBOL	MEANING
	Gasoline Tank: Full
	Gasoline Tank: Empty
	Stop

Quick Start Label Symbols

Some of the following symbols may be used on this product. Please study them and learn their meaning. Proper interpretation of these symbols will allow you to more safely operate the product.

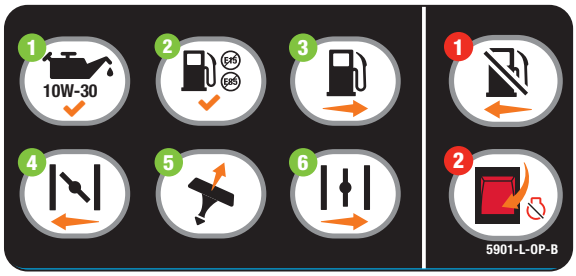

Starting the Engine

1. **Check Oil Level.** Recommended oil is 10W-30. The engine can be seriously damaged without oil. Always check the oil level before using. The machine must be resting firmly on level ground when checking.
2. Add gasoline with a minimum octane rating of 87 and an ethanol content of less than 10% by volume.
3. Move the **fuel valve** to “OPEN” position.
4. Move the **choke lever** to “CHOKE” position.
5. Pull the **starter cord** slowly until resistance is felt and then pull rapidly.
6. As engine warms up, move the **choke** to “RUN”.

Stopping the Engine

1. Move the **fuel valve** to the “CLOSED” position.
2. Press the **engine switch** to the “OFF” position.

CONTROLS AND FEATURES

Read this operator's manual before operating your string trimmer. Familiarize yourself with the location and function of the controls and features. Save this manual for future reference.

String Trimmer

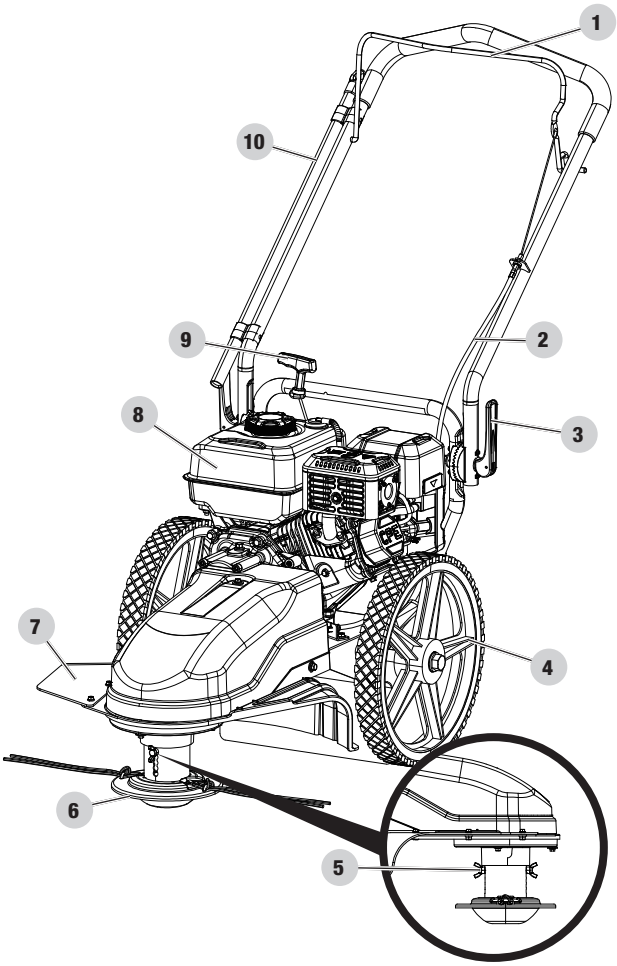

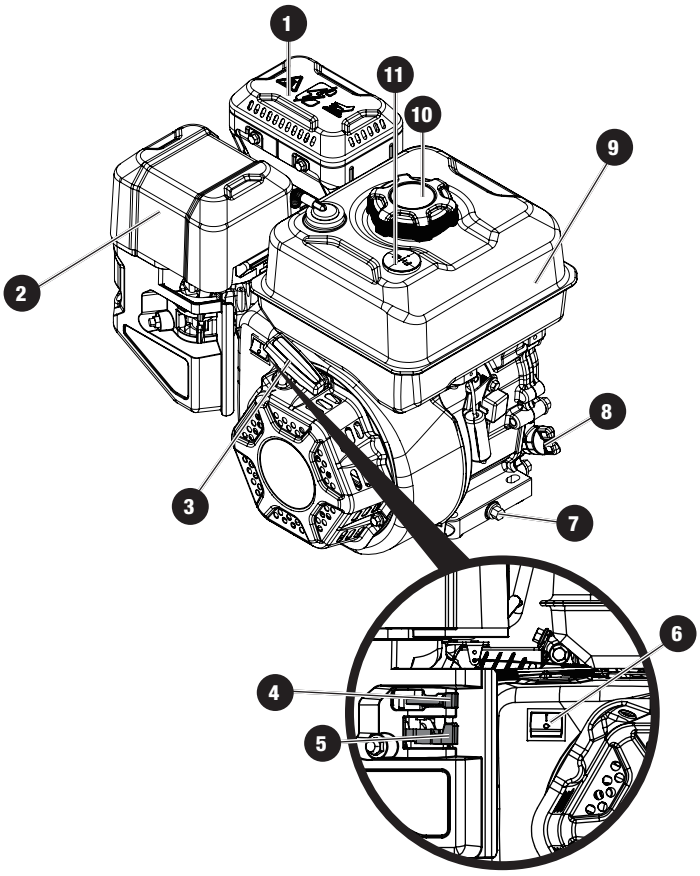

String Trimmer

1. Trimmer Head Control Lever
2. Trimmer Head Control Cable
3. Handle Height Adjustment
4. Wheels
5. Trimmer Head Height Adjustment
6. Trimmer Head
7. Trimmer Head Guard
8. Engine
9. Recoil Starter
10. Trimmer Line Storage Caddy

Engine

1. Muffler
2. Air Filter
3. Recoil Starter
4. Choke
5. Fuel Valve
6. Engine OFF Switch
7. Oil Drain Bolt
8. Oil Fill Cap/Dipstick
9. Fuel Tank
10. Fuel Tank Cap
11. Fuel Gauge

Tools Required

Part	Part Qty.	Hardware Needed	Hardware Qty.	Tool Needed	Torque (N.m)
Trimmer Head Guard	3	Self Tapping Screw 4.8	3	1x 8mm wrench or a Phillips screwdriver	
	1	Lock Nut M6	1	1x 10mm wrench or socket	
Trimmer Line	4	N/A	N/A	N/A	N/A

Accessories

– Engine Oil

– Oil Funnel

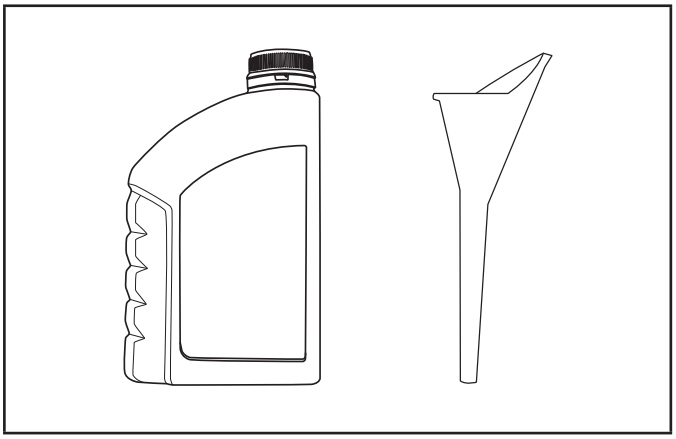

Industry Canada:
CAN ICES-002(B) / NMB-002(B)

Changes or modifications not expressly approved by Champion Power Equipment could void the user's authority to operate the equipment.

ASSEMBLY

Your string trimmer requires some assembly. This unit ships from our factory without oil. It must be properly serviced with fuel and oil before operation.

If you have any questions regarding the assembly of your string trimmer, call our Technical Support Team at 1-877-338-0999. Please have your serial number and model number available.

Unpacking

1. Set the shipping carton on a solid, flat surface.
2. Remove all contents from the carton.

Handle Assembly

1. Pivot the upper handle upward into the operating position and choose the handle height that is comfortable for the user.

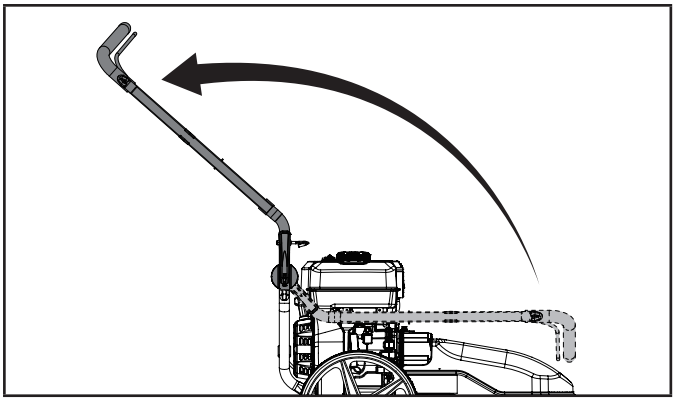

2. Ensure that the adjuster teeth are aligned to seat into each other then, push the handle adjust levers inward to lock them into place.

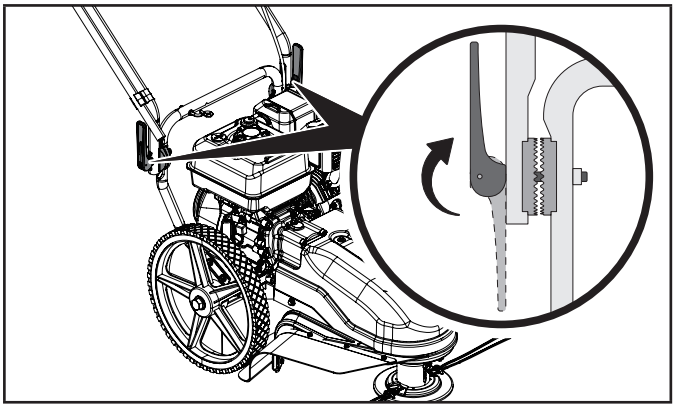

3. Gently pull the recoil rope out of the engine. Loop the rope through the eye bolt on the lower handle.

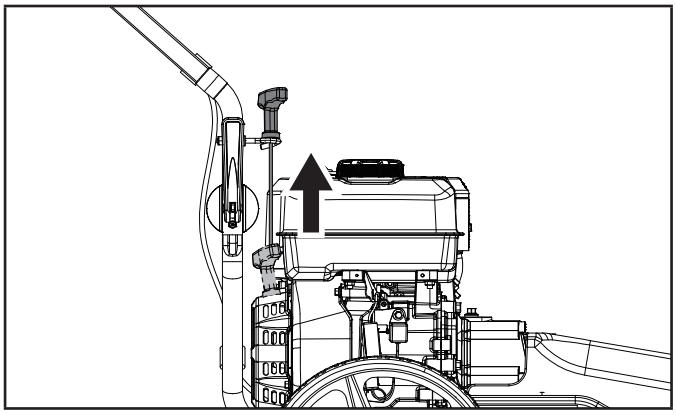

Trimmer Guard Installation

1. Align trimmer guard with 3 holes on the top face. Insert three (3) self tapping screws with either 8mm socket or wrench or a Phillips screwdriver (not included), securely tighten.

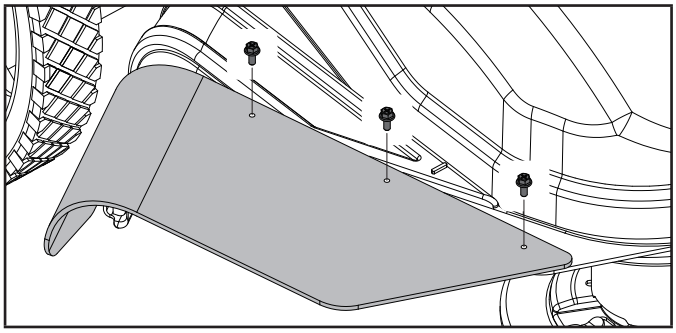

2. Place the end of the trimmer guard onto the bolt through the slot. Thread an M6 nut onto the bolt. Use a 10mm socket or wrench (not included), securely tighten.

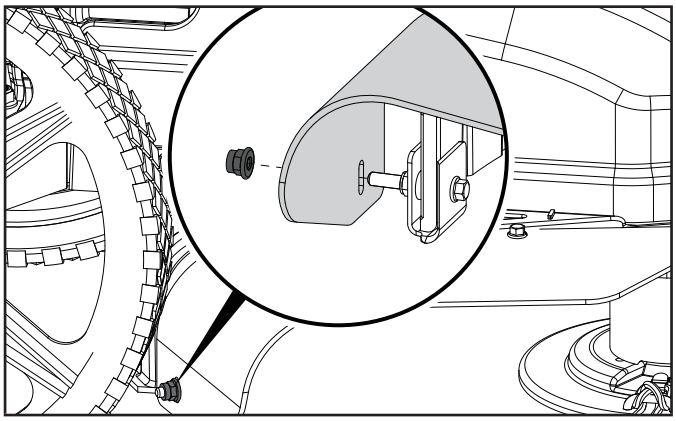

Replacing or Installing the Trimmer Line

For the best performance, use a heavy gauge .155” (3.9 mm) diameter trimmer line. Cut the length of the trimmer line to 24” (61 cm). Use the length guide, located on the shield, to make sure the trimmer line is the correct length. Place one end of the trimmer line at location “A” and bend it around the shield to location “B.” Cut line at location “B”.

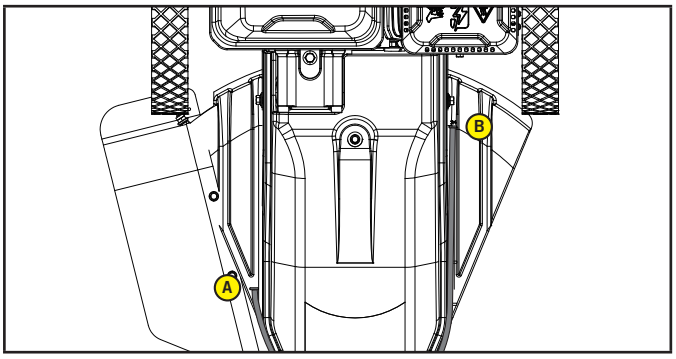

Cutting string can be wrapped in a variety of ways. Below is preferred but there are other methods available. The wrapping method and cutting string thickness chosen is ultimately based on what is determined the best for the operator.

To wrap the trimmer line in the standard configuration, follow the steps below.

⚠ WARNING

Before inspecting, cleaning, or servicing the string trimmer, shut off the engine. Wait for all moving parts to stop, disconnect spark plug wire and move it away from the spark plug. Failure to follow these instructions could result in personal injury or damage to the trimmer.

1. Remove the worn trimmer line from the trimmer head. Cut the trimmer line if stuck or it will not pull out. Cut the length of the 2 pieces of trimmer line to 24” (61 cm).
2. Fold the replacement trimmer line in half and insert both ends through the loop near the edge of the spindle. Pull the ends of the trimmer line through the loop until the line is securely beneath the metal tab.

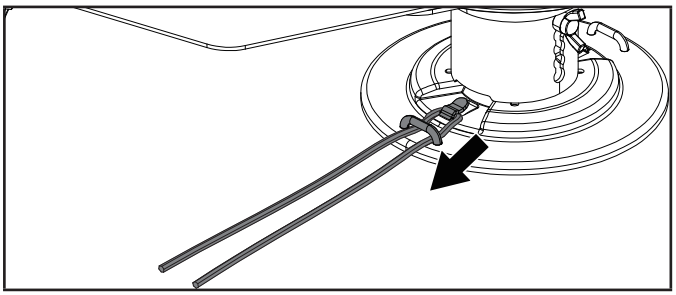

3. Wrap the ends back around and create a knot, starting with the right side.

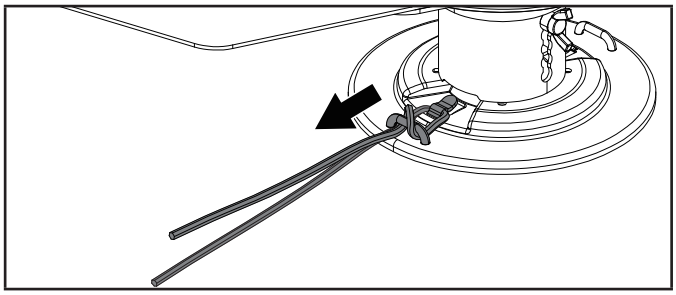

4. Continue with the left side, then pull the ends of the trimmer line through the loop until the line is secure.

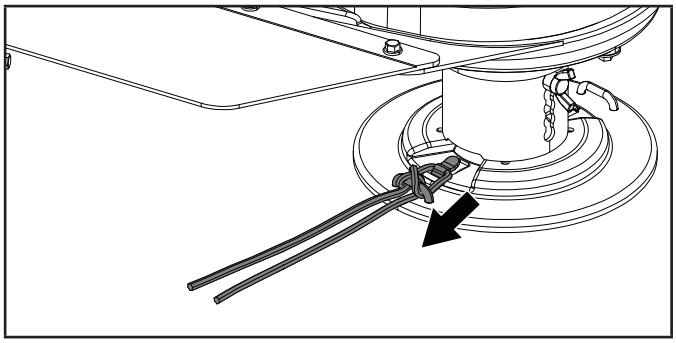

5. Pull tight to ensure the knot is tight and each end if even. If the ends are not even, loosen the knot and adjust as necessary, pull the knot tight.

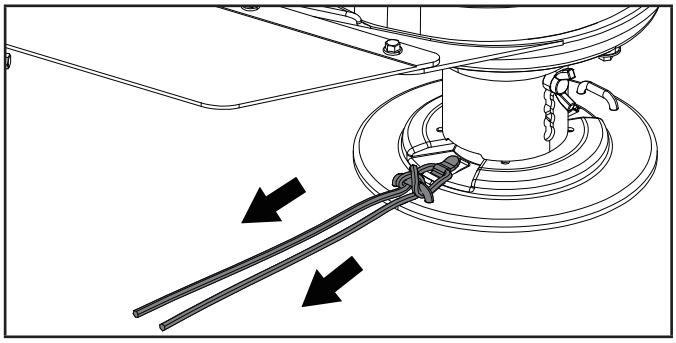

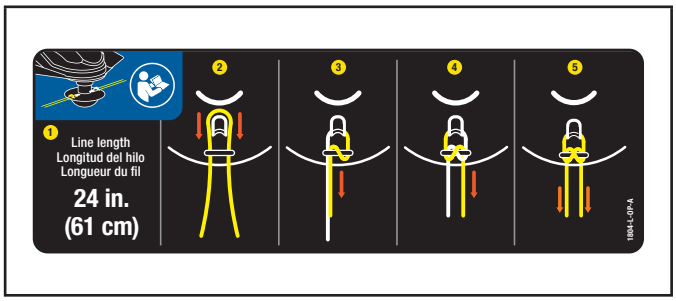

OPERATION

⚠ WARNING

Before operating your machine, carefully read and understand all safety, controls and operating instructions in this Operator's Manual.

Failure to follow these instructions can result in serious personal injury.

Slopes are a major factor related to slip and fall accidents, which can result in severe injury. Operation on slopes requires extra caution. If you feel uneasy on a slope, do not trim on it. For your safety, use a slope gauge to measure slopes before operating this machine on a sloped or hilly area. If the slope is greater than 15 degrees, do not trim on it.

Trim across the face of slopes; never up and down. Exercise extreme caution when changing direction on slopes.

Watch for holes, ruts, rocks, hidden objects, or bumps which can cause you to slip or trip. Tall grass can hide obstacles.

Always be sure of your footing. A slip and fall can cause serious personal injury. If you feel you are losing your balance, release the control lever immediately and the spindle will stop rotating within three (3) seconds.

⚠ WARNING

DO NOT trim near drop-offs, ditches or embankments, you could lose your footing or balance.

DO NOT trim slopes greater than 15 degrees.

DO NOT not trim on wet grass. Unstable footing could cause slipping.

Add Engine Oil

⚠ WARNING

DO NOT attempt to crank or start the engine before it has been properly filled with the recommended type and amount of oil.

Damage to the engine as a result of failing to follow these instructions will void your warranty.

NOTICE

The recommended oil type for typical use is **10W-30 automotive oil**.

If running string trimmer in extreme temperatures, refer to the "Recommended Engine Oil Type" chart.

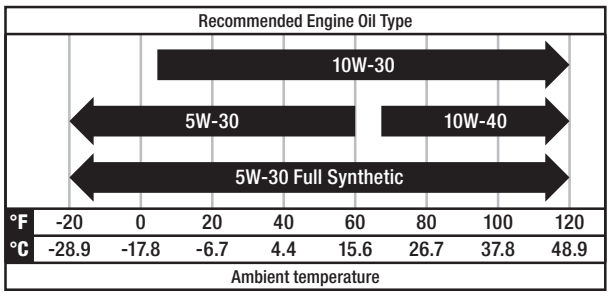

1. Place the string trimmer on a flat, level surface.
2. Remove oil fill cap/dipstick and, using a funnel, add up to 0.5 US qt. (500 mL) of oil (included) and replace oil fill cap/dipstick. DO NOT OVERFILL.

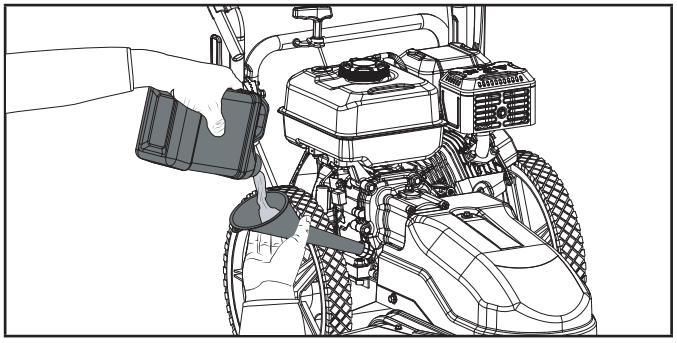

3. Insert the oil fill cap into the oil filler neck and seat it in place
4. Remove the oil fill cap/dipstick and check the oil level. The oil level should be at or near the OIL FILL mark on the dip stick.
5. Check engine oil level before every use and add as needed.

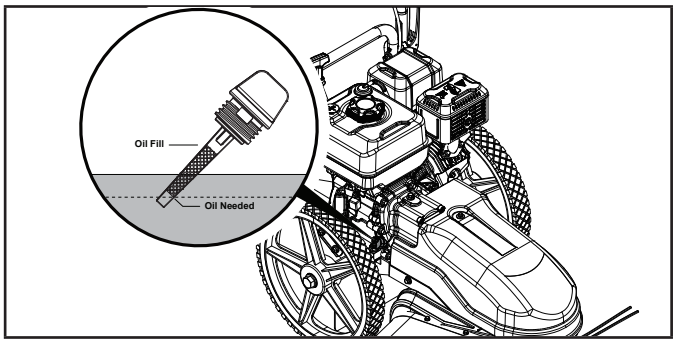

NOTICE

Check oil level often during the break-in period. Refer to the *Maintenance* section for recommended service intervals.

NOTICE

The first 5 hours of run time is the break-in period for the engine. During the break in period, it is recommended to use standard automotive, non-synthetic blended oils. Adjusting throttle setting will increase/ decrease engine speed helping to seat piston rings. Avoid bogging or lugging the engine down and avoid prolonged running at constant RPM. After the 5 hour break-in period, change the oil.

NOTICE

Synthetic oil may be used after the 5 hour initial break-in period. Using synthetic oil does not decrease the recommended oil change interval. Full synthetic 5W-30 oil will aid in starting in cold ambient < 41º F (5º C) temperatures.

NOTICE

Weather will affect engine oil and engine performance. Change the type of engine oil used based on weather conditions to suit the engine needs.

Add Fuel

DANGER

Gasoline vapors are highly flammable and extremely explosive.

DO NOT light or smoke cigarettes. Fire or explosion can cause severe burns or death.

Only fill or drain fuel outdoors in a well-ventilated area. DO NOT pump gasoline directly into the string trimmer. Use an approved container to transfer the fuel to the string trimmer.

Never use a gasoline container, gasoline tank, or any other fuel item that is broken, cut, torn or damaged.

DO NOT overfill the gasoline tank. Always keep fuel away from sparks, open flames, pilot lights, heat and other sources of ignition.

Use clean, fresh, regular unleaded gasoline with a minimum octane rating of 87 and an ethanol content of 10% or less by volume. E10 E15 E85

DO NOT mix oil with gasoline.

1. Remove the gasoline cap.
2. Slowly add gasoline to the tank. Tank is full when gasoline reaches red circle on screen. DO NOT OVERFILL. Gasoline can expand after filling. A minimum of ¼ in. (6.4 mm) of space left in the tank is required for gasoline expansion, although more than ¼ in. (6.4 mm) is recommended. Gasoline can be forced out of the tank as a result of expansion if overfilled, and can affect the stable running condition of the string trimmer.

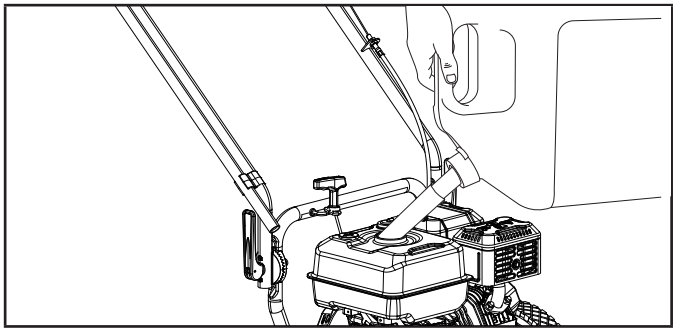

3. The approximate fuel level is shown on the fuel gauge on top of the fuel tank.

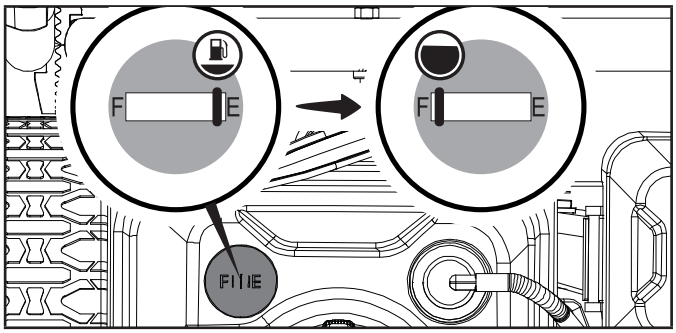

4. Screw on the gasoline cap and wipe away any spilled fuel.

CAUTION

Use unleaded gasoline with a minimum octane rating of 87 and an ethanol content of 10% or less by volume.

DO NOT light cigarettes or smoke when filling the tank.

DO NOT mix oil and gasoline.

DO NOT overfill the tank. Fill tank to approximately ¼ in. (6.4 mm) below the top of the tank to allow for gasoline expansion.

DO NOT pump gasoline directly into the string trimmer at the pump. Use an approved fuel container to transfer the gasoline to the string trimmer.

DO NOT fill tank indoors.

DO NOT fill tank when the engine is running or hot.

⚠ WARNING

Pouring gasoline too fast through the fuel screen may result in gasoline splashing over the string trimmer and operator while filling.

⚠ DANGER

Always shut off engine before fueling. Never add fuel to a machine with a running or hot engine. Wait at least 2 minutes to allow for cool down before refueling. Move at least 50' (15 m) from refueling site before starting engine. Do no smoke and stay away from open flames and sparks. Failure to safely handle fuel could result in serious personal injury and or property damage.

NOTICE

The string trimmer engine works well with 10% or less ethanol blended gasoline. When using ethanol-gasoline blends there are some issues worth noting:

- Ethanol-gasoline blends can absorb more water than gasoline alone.
- These ethanol blends can eventually separate, leaving water or a watery goo in the tank, fuel valve and carburetor. The compromised gasoline can be drawn into the carburetor and cause damage to the engine and/or create potential hazards.
- If a fuel stabilizer is used, confirm that it is formulated to work with ethanol-gasoline blends.
- Any damages or hazards caused by using ethanol blended gasoline higher than 10% by volume, improperly stored gasoline, and/or improperly formulated stabilizers, are not covered by manufacturer's warranty.

It is advisable to always shut off the gasoline supply and run the engine to starvation after each use. See *Storage* instructions for extended non-use.

⚠ WARNING

Running engines produce heat. Severe burns can occur on contact. Combustible material can catch fire on contact.

DO NOT touch hot surfaces.

Avoid contact with hot exhaust gases.

Allow equipment to cool before touching.

Maintain at least 3 ft. (91.4 cm) of clearance on all sides to ensure adequate cooling.

Maintain at least 5 ft. (1.5 m) of clearance from combustible materials.

⚠ WARNING

Never run the unit without the string trimmer blade guard installed. Use of an improperly assembled unit could result in serious personal injury.

NOTICE

In some State and local jurisdictions, operate power equipment during reasonable hours to comply within local noise ordinances. For more information, contact your State and local government for specific requirements.

Starting the Engine

1. Make certain the string trimmer is on a flat, level surface.
2. Move the choke lever to the "CHOKE" position.

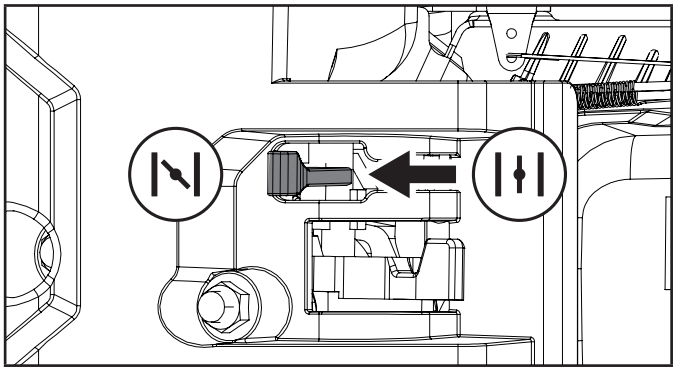

3. Move the fuel valve to the "OPEN" position.

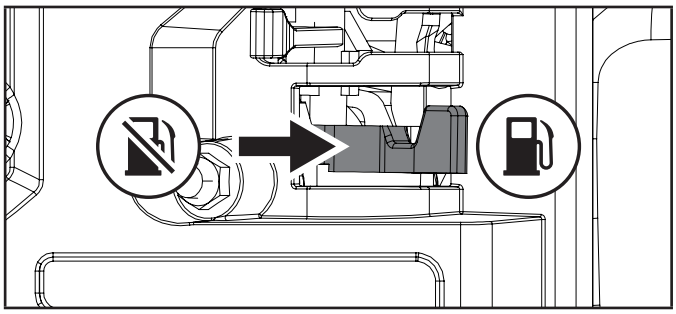

4. Pull the starter cord slowly until resistance is felt and then pull rapidly.

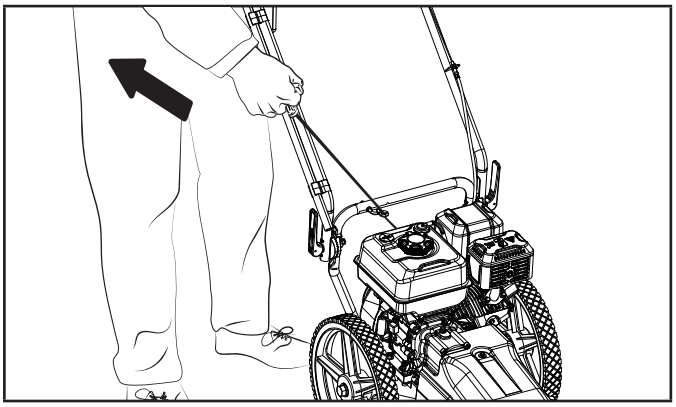

5. As engine warms up, move the choke lever to the “RUN” position.

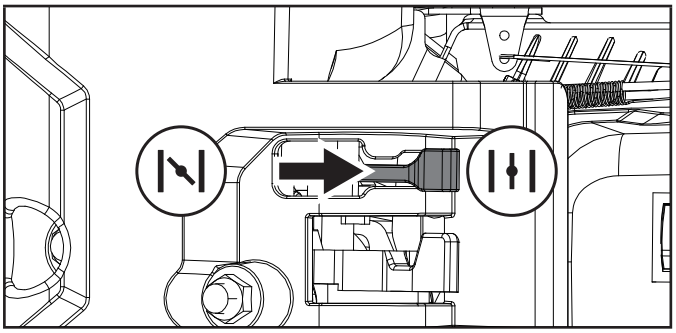

WARNING

Rapid retraction of the recoil cord could pull your hand and arm towards the engine faster than you can let go. Broken bones, fractures, bruises or sprains could result. Unintentional startup can result in entanglement, traumatic amputation or laceration.

NOTICE

Keep choke lever in “CHOKE” position for 2 pulls of the recoil starter. After second pull, move choke lever to the “RUN” position for up to the next 3 pulls of the recoil starter. Too much choke leads to spark plug fouling/engine flooding due to the lack of incoming air. This will cause the engine not to start.

NOTICE

Allow engine to warm at least 30 seconds depending on ambient temperature. The colder the temperature, the longer the warm-up required.

Stopping the Engine

1. Press the engine switch to the “OFF” position.

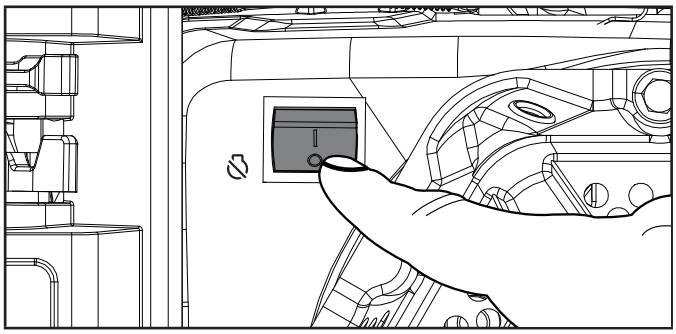

NOTICE

If the engine does not stop when the engine switch is pressed, slide the choke lever to the cold start (closed) position until the engine stops.

NOTICE

If the engine will not be used for a period of two (2) weeks or longer, please see the *Storage* section for proper engine and fuel storage.

Engaging and Disengaging the Trimmer Head

NOTICE

If the trimmer head does not spin or does not shut off, check if the trimmer head control lever control cable is disconnected. If you find it’s disconnected, reconnect trimmer head control lever control cable.

1. After you start the engine successfully, squeeze the trimmer head control lever against the upper handle to start the trimmer head.

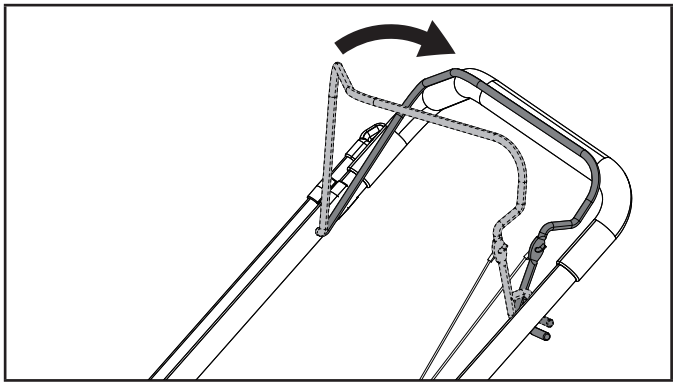

2. Release the trimmer control lever to stop the trimmer head from rotating.

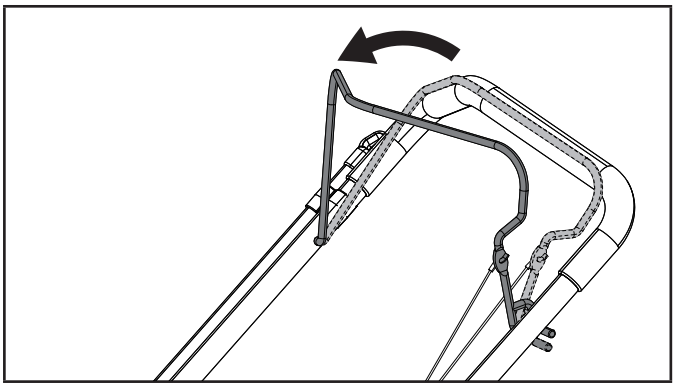

⚠ CAUTION

The trimmer head may continue to rotate for several seconds after the trimmer head control lever has been released.

⚠ WARNING

Always wear eye protection with side shields marked to comply with ANSI Z87.1. Failure to do so could result in objects being thrown into your eyes and other possible serious injuries.

Before Each Use Inspect the String Trimmer

1. Always make sure the spark plug wire has been disconnected and engine has been grounded.
2. Always visually inspect the string trimmer for loose fittings, bolts, nuts, cracks, or other damage.
3. DO NOT operate the string trimmer if there is any indication of damage to parts or the unit.
4. Always inspect the engine and make sure the oil level and fuel level are correct before operating.
5. Always inspect the work area for any distractions or factors that may prevent operator safety or proper operation.

Adjust the Handle Height

The handle height can be adjusted to a comfortable position for the user and, also be folded down for storage.

1. Pull the handle adjust lever outward to loosen the teeth engagement on the adjusters.

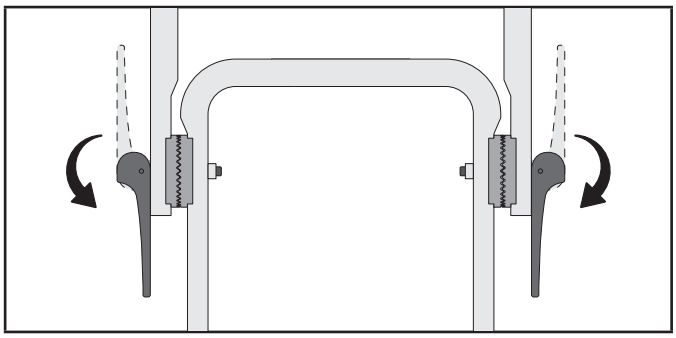

2. Move the handle to the desired height for user comfort.

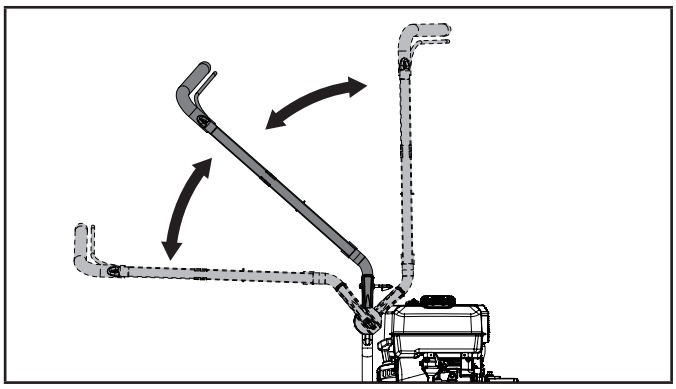

3. Ensure that the adjuster teeth are aligned to seat into each other then, push the handle adjust lever inward to lock back into place.

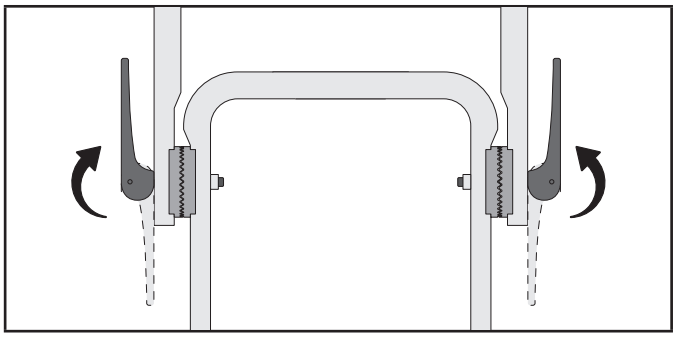

Adjust Trimmer Head Height

The trimmer head height can be adjusted to your desired trimming height for various applications.

1. Loosen the wing nuts on either side of the trimmer head.

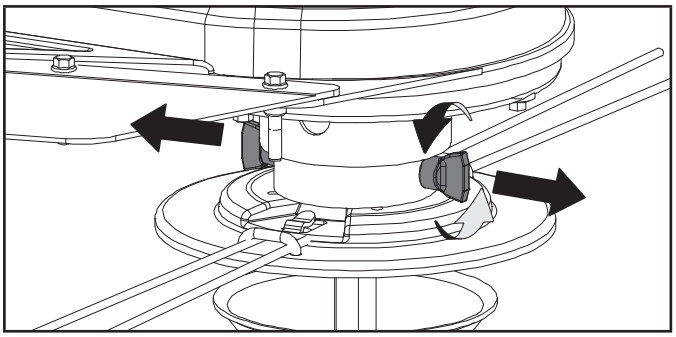

2. Slide the trimmer head upward or downward to the desired position.

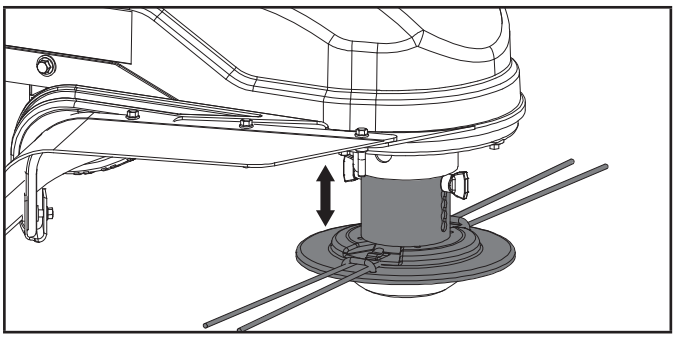

3. Securely tighten the wing nuts to lock the trimmer head into position.

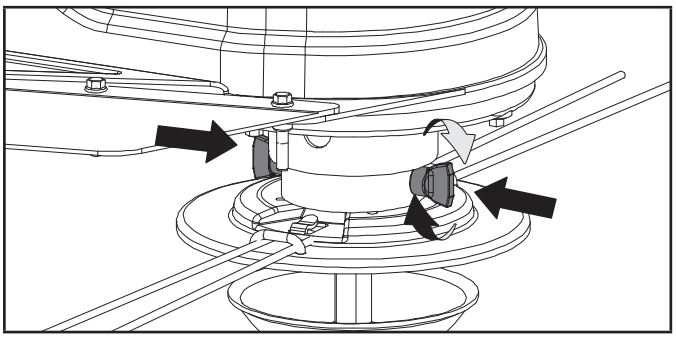

Operation at High Altitude

The density of air at high altitudes is lower than at sea level. Engine power is reduced as the air mass and air-fuel ratio decrease. Engine power and output will be reduced approximately 3½% for every 1000 ft. of elevation above sea level. At high altitudes increased exhaust emissions can also result due to the increased enrichment of the air fuel ratio. Other high altitude issues can include hard starting, increased fuel consumption and spark plug fouling.

To alleviate high altitude issues other than the natural power loss, CPE can provide a high altitude carburetor main jet. The alternative main jet and installation instructions can be obtained by contacting our Technical Support Team. Installation instructions are also available in the Technical Bulletin area of the CPE website.

The part number and recommended minimum altitude for the application of the high altitude carburetor main jet is listed in the following table.

In order to select the correct high altitude main jet it is necessary to identify the carburetor model. For this purpose, a code is stamped on the side of the carburetor. Select the correct high altitude jet part number corresponding to the carburetor code found on your particular carburetor.

Carb. Code	High Alt. Jet Part Number	Min. Altitude
16100-000016	16161-000024	3000-6000 ft. (914-1828 m)
	16161-000022	6000-8000 ft. (1828-2438 m)

⚠ WARNING

Operation using the alternative main jet at elevations lower than the recommended minimum altitude can damage the engine. For operation at lower elevations, the originally supplied standard main jet must be used. Operating the engine with the wrong engine configuration at a given altitude may increase its emissions and decrease fuel efficiency and performance.

MAINTENANCE

Make certain that the string trimmer is kept clean and stored properly. Only operate the unit on a flat, level surface in a clean, dry operating environment. DO NOT expose the unit to extreme conditions, excessive dust, dirt, moisture or corrosive vapors.

The owner/operator is responsible for all periodic maintenance.

Complete all scheduled maintenance in a timely manner.

Correct any issue before operating the string trimmer.

For service or parts assistance, contact our Technical Support Team at 1-877-338-0999.

⚠ WARNING

Never operate a damaged or defective string trimmer.

⚠ WARNING

Improper maintenance will void your warranty.

⚠ WARNING

Before inspecting, cleaning, or servicing the string trimmer, shut off the engine. Wait for all moving parts to stop, disconnect spark plug wire and move it away from the spark plug. Failure to follow these instructions could result in personal injury or damage to the string trimmer.

NOTICE

For Emission control devices and systems, read and understand your responsibilities for service as stated in the Emission Control Warranty Statement of this manual.

⚠ WARNING

When servicing, use only genuine approved replacement parts. Use of any other parts could result in poor performance or damage the string trimmer.

Cleaning the String trimmer

⚠ CAUTION

DO NOT spray string trimmer directly with water.

Water can contaminate the fuel system and can enter the engine through the cooling slots and damage the engine.

⚠ WARNING

Do not let brake fluids, gasoline, petroleum-based products, penetrating oils, etc., stay in contact with plastic parts. Chemicals can damage, weaken, or destroy plastic which could result in serious personal injury.

1. Use a damp cloth to clean exterior surfaces of the string trimmer.
2. Use a soft bristle brush to remove dirt and oil.
3. Use an air compressor (25 PSI) to clear dirt and debris from the string trimmer.
4. Inspect all air vents and cooling slots to ensure that they are clean and unobstructed.

Engine Oil Services

Check the engine oil level before each use and after every five hours of continuous operation. Running the engine when it is low on oil will quickly ruin the engine. It is recommended that you change the engine oil after every 10 hours of operation and even sooner when operating in extremely dirty or dusty conditions.

A. Check the Engine Oil Level

1. Park the string trimmer on a level area and shut off the engine.
2. Clean around the oil dipstick to prevent dirt from falling into the crankcase.
3. Remove the dipstick and wipe it clean. Reinsert the dipstick completely until it is seated in place and remove it. Add oil as needed to bring the level up to the FULL mark. Wipe the dipstick clean each time the oil level is checked. Do not overfill.
4. Replace the dipstick and ensure it is fully seated in the oil fill port.

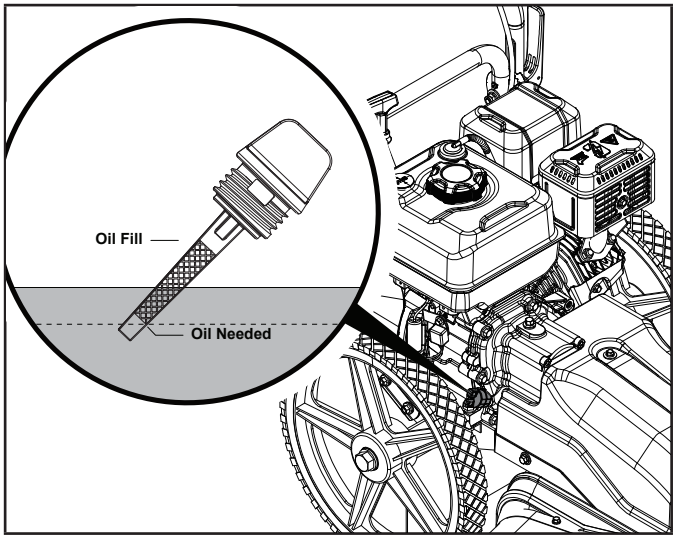

B. Changing the Engine Oil

⚠ CAUTION

DO NOT attempt to crank or start the engine before it has been properly filled with the recommended type and amount of oil. Damage to the string trimmer as a result of failure to follow these instructions will void your warranty.

NOTICE

The recommended oil type is **10W-30 automotive oil.**

Change oil when the engine is warm. Refer to the oil specification to select the proper grade for your operating environment.

1. Place the string trimmer on a flat, level surface.
2. Remove the spark plug cable from the spark plug.

1. Remove the oil drain bolt with a 10 mm socket (not included) and extension.

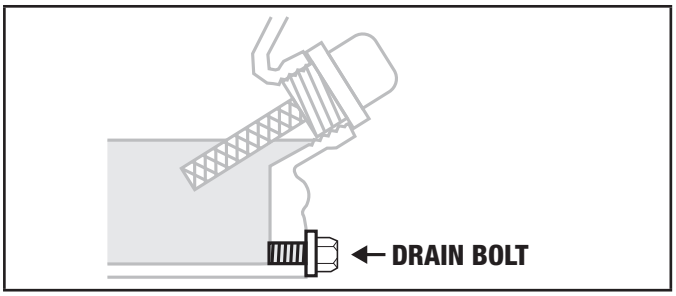

3. Allow the oil to drain completely into an appropriate container.

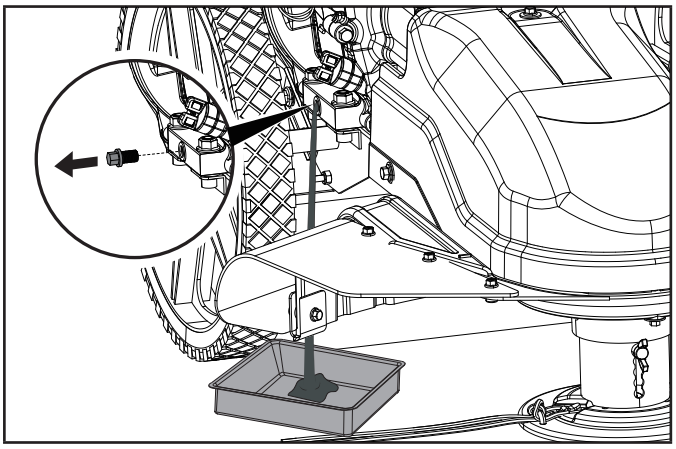

4. Add oil according to *Add Engine Oil* in *Assembly* section.
5. DO NOT OVERFILL. Oil not included for routine maintenance. Dispose of used oil at an approved waste management facility.

NOTICE

Once oil has been added, a visual check should show oil about 1-2 threads from running out of the fill hole. When using the dipstick to check oil level, DO NOT screw in the dipstick while checking.

Cleaning and Adjusting the Spark Plug(s)

1. Remove the spark plug cable from the spark plug.

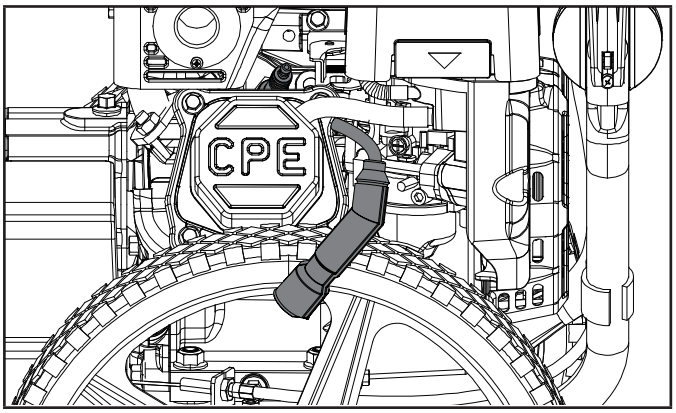

2. Use a spark plug socket tool (not included), or a 13/16 in. (21 mm) socket (not included) to remove the plug.
3. Inspect the electrode on the plug. It must be clean and not worn to produce the spark required for ignition.
4. Make certain the spark plug gap is 0.028-0.031 in. (0.7-0.8 mm).

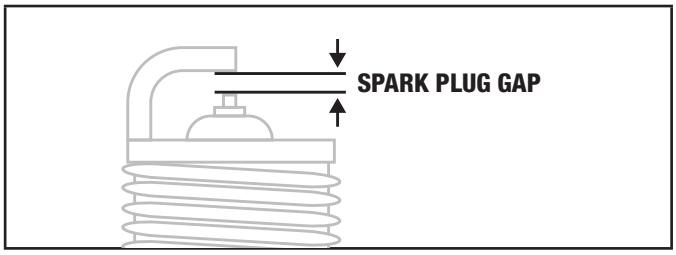

5. Refer to the spark plug types in *Specifications* when replacing the plug.
6. Firmly re-install the plug.
7. Attach the spark plug cable to the spark plug.

Cleaning the Air Filter

1. Using your finger, pry the outer tab up slightly and lift the air filter cover above the tab lock position.

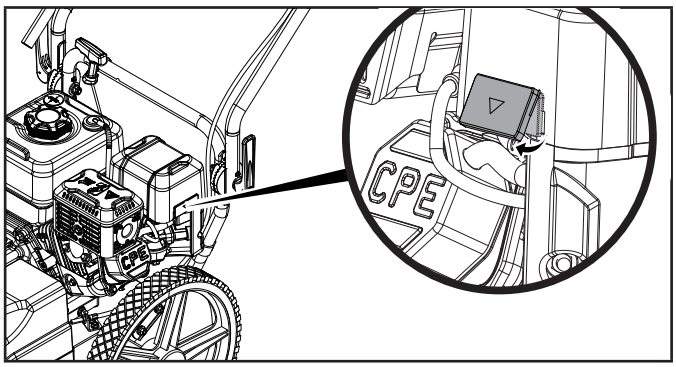

2. Remove both air filter cover and air filter element.

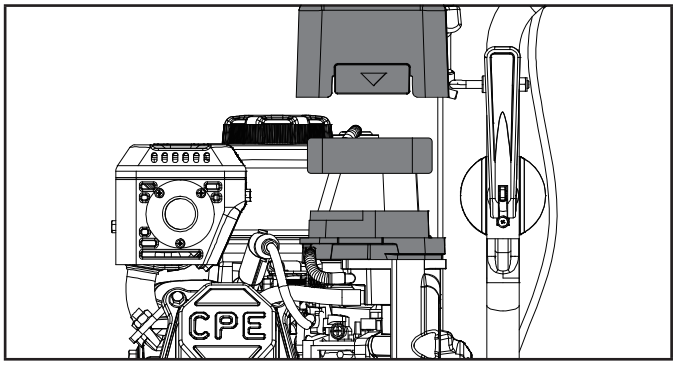

3. Wash in liquid detergent and water. Squeeze thoroughly dry in a clean cloth.
4. Saturate in clean engine oil.
5. Squeeze in a clean, absorbent cloth to remove all excess oil.

6. Place the filter in the assembly.
7. Reattach the air filter cover. Attach the side closest to the gas tank then pivot down to close. Make sure air filter cover snaps in place.

Cleaning the Spark Arrestor

1. If so equipped, allow the engine to cool completely before servicing the spark arrester.
2. Remove the screw holding the spark arrestor screen to the muffler.
3. Remove the spark arrester screen.
4. Carefully remove the carbon deposits from the spark arrester screen with a wire brush.
5. Replace the spark arrester if it is damaged.
6. Position the spark arrestor on the muffler and attach with the screw removed in step 2.

⚠ CAUTION

Failure to clean the spark arrestor will result in degraded engine performance.

NOTICE

Federal and local laws and administrative requirements indicate when and where spark arrestors are required. When ordered, spark arrestors are required for operation of this string trimmer in National Forest lands. In California, this string trimmer must not be used on any forest-covered land, brush-covered land, or grass-covered land unless the engine is equipped with a spark arrestor.

⚠ WARNING

Always check for fuel leaks before use. A leaking fuel cap is a hazard and must be replaced immediately. If any leaks are found, correct the problem before using the product. Failure to do so could result in a fire hazard that could cause serious personal injury, including equipment and property damage.

Belt Tension Adjustment

⚠ WARNING

Before inspecting, cleaning, or servicing the string trimmer, shut off the engine. Wait for all moving parts to stop, disconnect spark plug wire and move it away from the spark plug. Failure to follow these instructions could result in personal injury or damage to the string trimmer.

Proper belt tension is critical to good performance. Use two (2) 13mm wrenches (not provided).

To increase belt tension if the belt slips or the trimmer head does not rotate after the trimmer head drive control lever is engaged.

1. Loosen the upper jam nut on the trimmer head drive control cable.
2. Tighten the lower jam nut up in several threads.
3. Tighten.

Belt Tension Adjustment- Increase Belt Tension

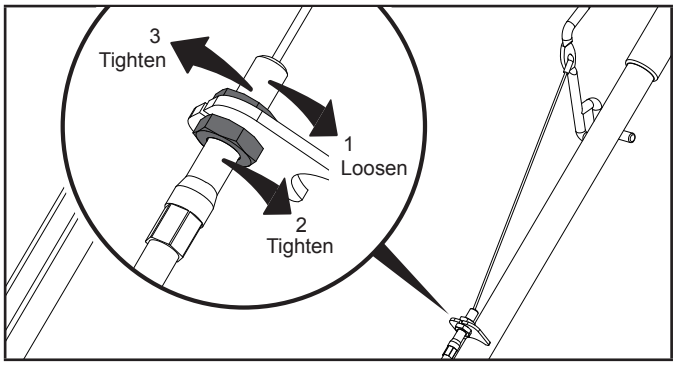

To decrease belt tension if the trimmer head starts to rotate when the trimmer head drive control lever is not completely pressed against the handlebar.

1. Loosen the lower jam nut on the trimmer head drive control cable.
2. Tighten the lower jam nut down in several threads.
3. Tighten the lower jam nut.

Belt Tension Adjustment- Decrease Belt Tension

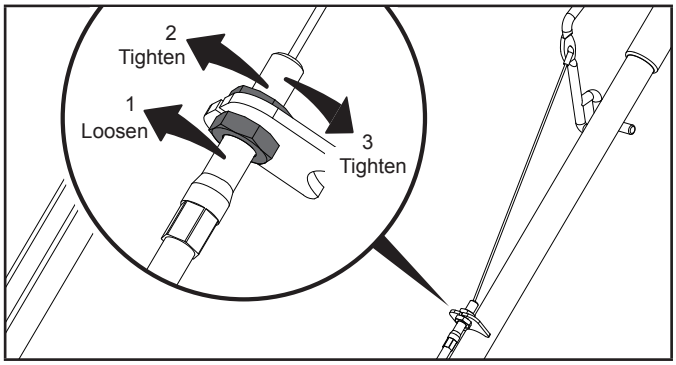

Replace the Belt

⚠ WARNING

Test the drive system. Start the engine and engage and disengage the trimmer several times. When disengaged, make sure the mower head completely stops when resting on the ground. If the trimmer head continues to rotate, contact our Technical Support Team at 1-877-338-0999.

Before inspecting, cleaning, or servicing the string trimmer, shut off the engine. Wait for all moving parts to stop, disconnect spark plug wire and move it away from the spark plug. Failure to follow these instructions could result in personal injury or damage to the string trimmer.

Belt

OEM Type 30110810702000

Replacement Type ..... Gates 4LXA880E (L × W × H = 888 × 12 × 7)

Use 8 mm and 10 mm wrenches (not provided).

1. Remove the three (3) bolts [one (1) M5 x 40 top and two (2) M6 x 14 on each side] and three (3) washers that hold the top cover to the trimmer deck. Use an 8 mm and 10 mm socket or wrench, not included.
2. Remove the one (1) bottom M6 x 20 bolt and washer that holds the top cover to the trimmer deck. Use a 10 mm socket or wrench, not included.

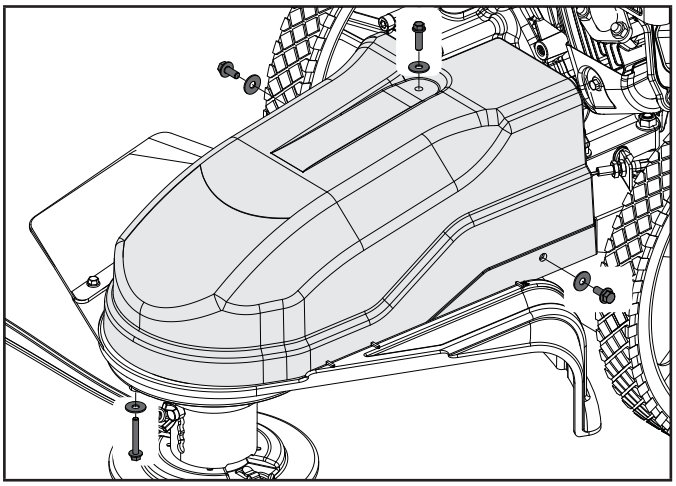

3. Remove the top shroud/hardware and set aside.
4. Remove the belt from the trimmer head side pulley first, followed by the engine pulley side last.

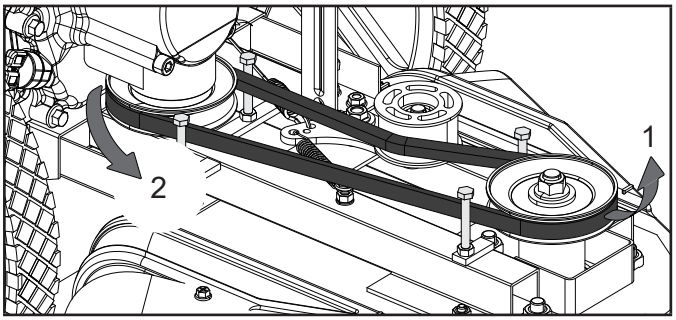

5. Reinstall belt and reverse order for cover assembly. Hand tighten bolts securely.

Check or Add Gearbox Grease

⚠ WARNING

Before inspecting, cleaning, or servicing the string trimmer, shut off the engine. Wait for all moving parts to stop, disconnect spark plug wire and move it away from the spark plug. Failure to follow these instructions could result in personal injury or damage to the string trimmer.

Gearbox Grease

Type ..... Lithium

Capacity ..... MAX 9.8 US fl. oz. (290 mL)

Check the gear box grease level once a season. Operating the string trimmer when the gearbox is low on grease can result in severe damage. Add 5 pumps of lithium grease annually.

1. Remove the one (1) M10 x 15 bolt and washer on top of the gearbox. Use a 10 mm socket or wrench, not included.
2. Add 5 pumps of lithium grease annually.
3. Reinstall bolt and washer, hand tighten bolt securely.

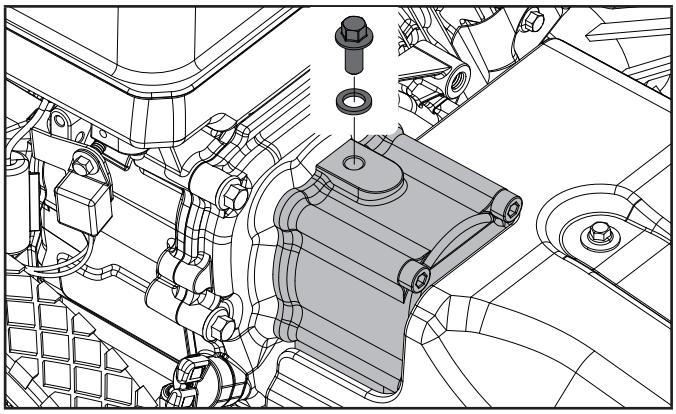

Adjusting the Governor

⚠ WARNING

Tampering with the factory set governor will void your warranty.

The air-fuel mixture is not adjustable. Tampering with the factory set governor can damage your string trimmer. Contact our Technical Support Team at 1-877-338-0999 for all other service and/or adjustment needs.

Maintenance Schedule

Follow the service intervals indicated in the following maintenance schedule.

Service your string trimmer more frequently when operating in adverse conditions.

Contact our Technical Support Team at 1-877-338-0999 to locate the nearest CPE certified service dealer for your string trimmer or engine maintenance needs.

EVERY 8 HOURS OR PRIOR TO EACH USE

- ☐ Check oil level
- ☐ Clean around air intake and muffler
- ☐ Check all bolts, nuts are securely tightened

FIRST 5 HOURS (BREAK IN)

- ☐ Change oil

EVERY 50 HOURS OR EVERY SEASON

- ☐ Clean air filter.
- ☐ Change oil if operating under heavy load or in hot environments.
- ☐ Add grease to the gearbox.

EVERY 100 HOURS OR EVERY SEASON

- ☐ Change oil
- ☐ Clean/adjust spark plug
- ☐ Check/adjust valve clearance*
- ☐ Clean spark arrester
- ☐ Clean fuel tank and filter*

EVERY 250 HOURS

- ☐ Clean combustion chamber*

EVERY 3 YEARS

- ☐ Replace fuel line*

** To be performed by knowledgeable, experienced owners or CPE certified service centers.*

STORAGE

Refer to the *Maintenance* section for proper cleaning instructions.

1. Allow the string trimmer to cool completely before storage.
2. Clean the string trimmer according to the instructions in the *Maintenance* section.
3. Store the unit in a clean, dry area out of direct sunlight.

Short Term Engine Storage (Up to 30 Days)

1. Allow the engine to cool completely before storage.
2. Clean engine according to the *Maintenance* section.
3. To extend the fuel storage life add a properly formulated fuel stabilizer to the tank.

Long Term Engine Storage (30 Days – 1 Year)

1. Add a properly formulated fuel stabilizer to the tank.
2. Run the engine for a few minutes so the treated fuel cycles through the fuel system and carburetor.
3. The engine needs to cool completely before cleaning and storage.
4. Clean the engine according to the *Maintenance* section.
5. Change the oil according to the *Maintenance* section.
6. Remove the spark plug and pour about 1/2 oz. (14.9 mL) of oil into the cylinder. Crank the engine slowly to distribute the oil and lubricate the cylinder.
7. Reattach the spark plug.

⚠ WARNING

Never store the string trimmer indoors or next to appliances where there is a source of heat, open flame, spark or pilot light as these conditions can ignite gasoline vapors. DO NOT store the string trimmer near fertilizer or any corrosive material. Even with an empty fuel tank, gasoline vapors could ignite. When storing the string trimmer for short or long periods of time, always be sure that the engine switch (where applicable) and the fuel valve (where applicable) are set in the “OFF” position.

⚠ DANGER

The engine exhaust contains carbon monoxide, a colorless, odorless, poisonous gas. Breathing carbon monoxide will cause nausea, dizziness, fainting or death. If you start to feel dizzy or weak, get to fresh air immediately.

NOTICE

The engine works well with 10% or less ethanol blend fuels. When using blended fuels, there are some issues worth noting:

– Ethanol-gasoline blends can absorb more water than gasoline alone.

– These blends can eventually separate, leaving water or a watery goo in the tank, fuel valve and carburetor.

– The compromised gasoline can be drawn into the carburetor and cause damage to the engine and/or create power performance problems.

– There are only a few suppliers of fuel stabilizer that are formulated to work with ethanol blend fuels.

– Any damages or hazards caused by using improper fuel, improperly stored fuel, and/or improperly formulated stabilizers, are not covered by manufacturer's warranty. It is advisable to always shut off the fuel supply (where applicable - not every unit has a fuel shut off), run the engine to fuel starvation and drain the tank when the equipment is not in use for more than a 30-day period.

SPECIFICATIONS

String Trimmer Specifications

Model	100729
Start Type	Manual
Line Diameter	0.155 in. (3.9 mm)
Line Length	24 in. (61 cm)
Wheel Diameter	14 in. (35.5 cm)
Overall Dimensions	
Weight	76 lbs. (34.3 kg)
Length	45.3 in. (115 cm)
Width	19.7 in. (50 cm)
Height	45.6 in. (115.8 cm)
Belt	
OEM Type	30110810702000
Replacement Type	Gates 4LXA880E (L × W × H = 888 × 12 × 7)
Gearbox Grease	
Type	Lithium
Capacity	MAX 9.8 US fl oz (290 mL)

Engine Specifications

Model	R210P
Displacement	212 cc
Type	4-Stroke OHV
Spark Plug	
OEM Type	F6RTC
Replacement Type	NGK BPR6ES or equivalent
Gap	0.028 - 0.031 in. (0.7 - 0.8 mm)
Valve	
Intake Clearance	0.0039 - 0.0059 in. (0.1 - 0.15 mm)
Exhaust Clearance	0.0059 - 0.0079 in. (0.15 - 0.2 mm)

NOTICE

A technical bulletin regarding valve adjustment procedures is available at www.championpowerequipment.com.

Oil Specifications

NOTICE

Temperature will affect engine oil and engine performance. Change the type of engine oil used based on temperature shown in the *"Recommended Engine Oil Type"* table.

DO NOT OVERFILL.

Type	*See following chart
Capacity	0.5 US qt. (500 mL)

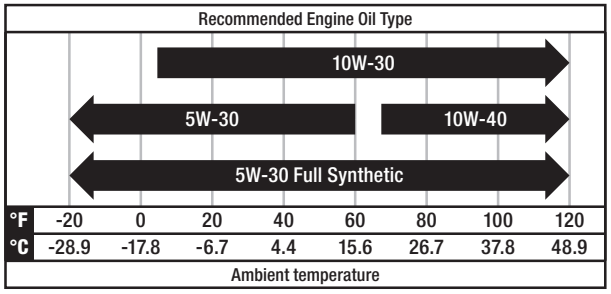

Fuel Specifications

Use unleaded gasoline with a minimum octane rating of 87 and an ethanol content of 10% or less by volume. DO NOT USE E15 or E85. DO NOT OVERFILL.

Gasoline Capacity	0.82 gal. (3.1 L)

Temperature Specifications

Starting Temperature Range (°F/°C)	5 to 104/-15 to 40

NOTICE

An important message about temperature: Your product is designed and rated for continuous operation at ambient temperatures up to 104°F (40°C). When needed, it may be operated at temperatures ranging from 5°F (-15°C) to 122°F (50°C) for short periods of time. If exposed to temperatures outside this range during storage, it should be brought back within this range before operation. In any event, the product must always be operated outdoors, in a well-ventilated area and away from doors, windows and vents.

TROUBLESHOOTING

Problem	Cause	Solution
Engine does not start	Spark plug is disconnected.	Reconnect wire.
	Fuel tank is empty.	Add fuel.
	Choke control (if so equipped) in incorrect position.	Move to CHOKE position.
	Stale gasoline.	Drain fuel and add fresh fuel.
	Dirty air filter.	Clean or replace air filter.
	Defective or incorrectly gapped spark plug.	Inspect spark plug.
	Carburetor out of adjustment.	Contact Technical Support Team.
	Misadjusted throttle control	Contact Technical Support Team.
	Dirt or water in fuel tank.	Contact Technical Support Team.
Engine runs poorly	Defective or incorrectly gapped spark plug.	Inspect the spark plug.
	Dirty air filter.	Clean or replace air filter.
	Carburetor out of adjustment.	Contact Technical Support Team.
	Stale gasoline.	Drain fuel and add fresh fuel.
	Dirt or water in fuel tank.	Contact Technical Support Team.
	Engine cooling system clogged.	Clean air-cooling system.
Engine overheats	Engine cooling system clogged.	Clean air-cooling system.
	Carburetor out of adjustment.	Contact Technical Support Team.
	Oil level is low.	Check oil level.
Excessive vibration/noise	Loose parts.	Check and tighten all fasteners.
	See engine problems above.	See engine solutions above.
Engine does not shut off	Defective engine switch	Inspect engine switch. Replace if necessary
Poor trimming performance	Loose parts.	Check and tighten all fasteners.
	See engine problems above.	See engine solutions above.
Trimmer head does not retain line	Trimmer line not properly attached	Follow instructions for attaching line.
	Broken line retainer	Have trimmer head assembly replaced.
	Trimmer line not correct size	Use a .155 in. (4 mm) trimmer line.
Trimmer head does not spin or does not shut off	Check trimmer head control lever control cable is disconnected.	Reconnect trimmer head control lever control cable.

For other issues and technical support:

Technical Support Team
Toll Free 1-877-338-0999
support@championpowerequipment.com

WARRANTY*

CHAMPION POWER EQUIPMENT

2 YEAR LIMITED WARRANTY

Warranty Qualifications

To register your product for warranty and FREE lifetime call center technical support please visit:

https://www.championpowerequipment.com/register

To complete registration you will need to include a copy of the purchase receipt as proof of original purchase. Proof of purchase is required for warranty service. Please register within ten (10) days from date of purchase.

Repair/Replacement Warranty

CPE warrants to the original purchaser that the mechanical and electrical components will be free of defects in material and workmanship for a period of two years (parts and labor) from the original date of purchase and 180 days (parts and labor) for commercial and industrial use. Transportation charges on product submitted for repair or replacement under this warranty are the sole responsibility of the purchaser. This warranty only applies to the original purchaser and is not transferable.

Do Not Return The Unit To The Place Of Purchase

Contact CPE's Technical Service and CPE will troubleshoot any issue via phone or e-mail. If the problem is not corrected by this method, CPE will, at its option, authorize evaluation, repair or replacement of the defective part or component at a CPE Service Center. CPE will provide you with a case number for warranty service. Please keep it for future reference. Repairs or replacements without prior authorization, or at an unauthorized repair facility, will not be covered by this warranty.

Warranty Exclusions

This warranty does not cover the following:

Normal Wear

Products with mechanical and electrical components need periodic parts and service to perform well. This warranty does not cover repair when normal use has exhausted the life of a part or the equipment as a whole.

Installation, Use and Maintenance

This warranty will not apply to parts and/or labor if the product is deemed to have been misused, neglected, involved in an accident, abused, loaded beyond the product's limits or modified. Normal maintenance is not covered by this warranty and is not required to be performed at a facility or by a person authorized by CPE.

Other Exclusions

This warranty excludes:

- Cosmetic defects such as paint, decals, etc.
- Wear items such as filter elements, o-rings, belts, trimmer line (all such items where applicable), etc.
- Failures due to acts of God and other force majeure events beyond the manufacturer's control.
- Problems caused by parts that are not original OEM or recommended replacement parts by Champion Power Equipment.

Limits of Implied Warranty and Consequential Damage

Champion Power Equipment disclaims any obligation to cover any loss of time, use of this product, freight, or any incidental or consequential claim by anyone from using this product. THIS WARRANTY AND THE ATTACHED U.S. EPA and/or CARB EMISSION CONTROL SYSTEM WARRANTIES (WHEN APPLICABLE) ARE IN LIEU OF ALL OTHER WARRANTIES, EXPRESS OR IMPLIED, INCLUDING WARRANTIES OF MERCHANTABILITY OR FITNESS FOR A PARTICULAR PURPOSE.

A unit provided as an exchange will be subject to the warranty of the original unit. The length of the warranty governing the exchanged unit will remain calculated by reference to the purchase date of the original unit.

This warranty gives you certain legal rights which may change from state to state or province to province. Your state or province may also have other rights you may be entitled to that are not listed within this warranty.

Contact Information

Address

Champion Power Equipment, Inc.
6370 S Pioneer Way, Unit 101
Las Vegas, NV 89113 USA
www.championpowerequipment.com

Customer Service

Toll Free: 1-877-338-0999
info@championpowerequipment.com
Fax no.: 1-562-236-9429

Technical Service

Toll Free: 1-877-338-0999
tech@championpowerequipment.com
❗ EMERGENCY 24 HOUR SUPPORT: 1-562-204-1188

*Except as otherwise stipulated in any of the following enclosed Emission Control System Warranties (when applicable) for the Emission Control System: U.S. Environment Protection Agency (EPA) and/or California Air Resources Board (CARB).

CHAMPION POWER EQUIPMENT, INC. (CPE)
AND THE UNITED STATES ENVIRONMENTAL PROTECTION AGENCY (U.S. EPA)
EMISSION CONTROL SYSTEM WARRANTY

Your Champion Power Equipment (CPE) engine complies with U.S. EPA emissions regulations.

YOUR WARRANTY RIGHTS AND OBLIGATIONS:

The US EPA and CPE are pleased to explain the Federal Emission Control Systems Warranty on your 2025 small off-road engine and engine powered equipment. New engines and equipment must be designed, built and equipped, at the time of sale, to meet U.S. EPA regulations for small off-road engines. CPE warrants the emission control system on your small off-road engine and equipment for the period of time listed below, provided there has been no abuse, neglect, unapproved modification, or improper maintenance of your equipment.

Your emission control system may include parts such as the carburetor, fuel-injection system, the ignition system, catalytic converter and fuel lines. Also included may be hoses, belts, connectors and other emission related assemblies. Where a warrantable condition exits, CPE will repair your small off-road engine at no cost to you including diagnosis, parts and labor.

MANUFACTURER'S EMISSION CONTROL SYSTEM WARRANTY COVERAGE:

This emission control system is warranted for two years, subject to provisions set forth below. If, during the warranty period, an emission related part on your engine is defective in materials or workmanship, the part will be repaired or replaced by CPE.

OWNER'S WARRANTY RESPONSIBILITIES:

As the small off-road engine owner, you are responsible for the performance of the required maintenance listed in your Owner's Manual. CPE recommends that you retain all your receipts covering maintenance on your small off-road engine, but CPE cannot deny warranty solely for the lack of receipts or for your failure to ensure the performance of all scheduled maintenance.

As the small off-road engine owner, you should however be aware that CPE may deny you warranty coverage if your small, off-road engine or a part has failed due to abuse, neglect, improper maintenance or unapproved modifications.

You are responsible for presenting your small off-road engine to an Authorized CPE service outlet or alternate service outlet as described in (3)(f.) below, CPE dealer or CPE, Las Vegas, NV. as soon as a problem exists. The warranty repairs should be completed in a reasonable amount of time, not to exceed 30 days.

If you have any questions regarding your warranty rights and responsibilities, you should contact:

Champion Power Equipment, Inc.
Customer Service
6370 S Pioneer Way, Unit 101
Las Vegas, NV 89113
1-877-338-0999
tech@championpowerequipment.com

EMISSION CONTROL SYSTEM WARRANTY

The following are specific provisions relative to your Emission Control System (ECS) Warranty Coverage.

1. **APPLICABILITY:** This warranty shall apply to 1997 and later model year small off-road engines. The ECS Warranty Period shall begin on the date the new engine or equipment is delivered to its original, end-use purchaser, and shall continue for 24 consecutive months thereafter.

2. **GENERAL EMISSIONS WARRANTY COVERAGE**
   CPE warrants to the original, end-use purchaser of the new engine or equipment and to each subsequent purchaser that the ECS when installed is:

   2a. Designed, built and equipped so as to conform to U.S. EPA emissions standards for spark-ignited engines at or below 19 kilowatts.

   2b. Free from defects in materials and workmanship that cause the failure of a warranted part to be identical in all material respects to the part as described in the engine manufacturer's application for certification for a period of two years.

3. **THE WARRANTY ON EMISSION-RELATED PARTS WILL BE INTERPRETED AS FOLLOWS:**

   3a. Any warranted part that is not scheduled for replacement as required maintenance in the Operator's Manual shall be warranted for the ECS Warranty Period. If any such part fails during the ECS Warranty Period, it shall be repaired or replaced by CPE according to Subsection "d" below. Any such part repaired or replaced under the ECS Warranty shall be warranted for any remainder of the ECS Warranty Period.

   3b. Any warranted, emissions-related part which is scheduled only for regular inspection as specified in the Operator's Manual shall be warranted for the ECS Warranty Period. A statement in such written instructions to the effect of "repair or replace as necessary", shall not reduce the ECS Warranty Period. Any such part repaired or replaced under the ECS Warranty shall be warranted for the remainder of the ECS Warranty Period.

   3c. Any warranted, emissions-related part which is scheduled for replacement as required maintenance in the Operator's Manual shall be warranted for the period of time prior to the first scheduled replacement point for that part. If the part fails prior to the first scheduled replacement, the part shall be repaired or replaced by CPE according to Subsection "d" below. Any such emissions-related part repaired or replaced under the ECS Warranty, shall be warranted for the remainder of the ECS Warranty Period prior to the first scheduled replacement point for such emissions-related part.

   3d. Repair or replacement of any warranted, emissions-related part under this ECS Warranty shall be performed at no charge to the owner at a CPE Authorized Service Outlet.

   3e. The owner shall not be charged for diagnostic labor which leads to the determination that a part covered by the ECS Warranty is in fact defective, provided that such diagnostic work is performed at a CPE Authorized Service Outlet.

   3f. CPE shall pay for covered emissions warranty repairs at non-authorized service outlets under the following circumstances:

      i. The service is required in a population center with a population over 100,000 according to U.S. Census 2000 without a CPE Authorized Service Outlet AND

      ii. The service is required more than 100 miles from a CPE Authorized Service Outlet. The 100 mile limitation does not apply in the following states: Alaska, Arizona, Colorado, Hawaii, Idaho, Montana, Nebraska, Nevada, New Mexico, Oregon, Texas, Utah and Wyoming.

   3g. CPE shall be liable for damages to other original engine components or approved modifications proximately caused by a failure under warranty of an emission-related part covered by the ECS Warranty.

   3h. Throughout the ECS Warranty Period, CPE shall maintain a supply of warranted emission-related parts sufficient to meet the expected demand for such emission-related parts.

   3i. Any CPE Authorized and approved emission-related replacement part may be used in the performance of any ECS Warranty maintenance or repair and will be provided without charge to the owner. Such use shall not reduce CPE's warranty obligation.

   3j. Unapproved add-on or modified parts may not be used to modify or repair a CPE engine. Such use voids this ECS Warranty and shall be sufficient grounds for disallowing an ECS Warranty claim. CPE shall not be liable hereunder for failures of any warranted parts of a CPE engine caused by the use of such an unapproved add-on or modified part.

EMISSION-RELATED PARTS INCLUDE THE FOLLOWING: (using those portions of the list applicable to the engine)

Systems covered by this warranty	Parts Description
Fuel Metering System	Fuel regulator, Carburetor and internal parts
Air Induction System	Air cleaner, Intake manifold
Ignition System	Spark plug and parts, Magneto ignition system
Exhaust System	Exhaust manifold, catalytic converter
Miscellaneous Parts	Tubing, Fittings, Seals, Gaskets, and Clamps associated with these listed systems.
Evaporative Emissions	Fuel Tank, Fuel Cap, Fuel Lines (for liquid fuel and fuel vapors), Fuel Line Fittings, Clamps, Pressure Relief Valves, Control Valves, Control Solenoids, Electronic Controls, Vacuum Control Diaphragms, Control Cables, Control Linkages, Purge Valves, Gaskets, Liquid/Vapor Separator, Carbon Canister, Canister Mounting Brackets, Carburetor Purge Port Connector

TO OBTAIN WARRANTY SERVICE:

You must take your CPE engine or the product on which it is installed, along with your warranty registration card or other proof of original purchase date, at your expense, to any Champion Power Equipment dealer who is authorized by Champion Power Equipment, Inc. to sell and service that CPE product during his normal business hours. Alternate service locations defined in Section (3)(f.) above must be approved by CPE prior to service. Claims for repair or adjustment found to be caused solely by defects in material or workmanship will not be denied because the engine was not properly maintained and used.

If you have any questions regarding your warranty rights and responsibilities, or to obtain warranty service, please write or call Customer Service at Champion Power Equipment, Inc.

Champion Power Equipment, Inc.
6370 S Pioneer Way, Unit 101
Las Vegas, NV 89113
1-877-338-0999
Attn.: Customer Service
tech@championpowerequipment.com