OPERATOR'S MANUAL

MODEL #201352
3 IN. (7.6 CM) CHIPPER SHREDDER

ACTIVATE YOUR WARRANTY

by registering your product:
championpowerequipment.com

SERIAL NO.

1·877·338·0999

or visit **championpowerequipment.com**

READ AND SAVE THIS MANUAL. This manual contains important safety precautions which should be read and understood before operating the product. Failure to do so could result in serious injury. This manual should remain with the product.

Specifications, descriptions and illustrations in this manual are as accurate as known at the time of publication, but are subject to change without notice.

4422-M-OP | REV 20261010 | EN

Champion Power Equipment, Inc.

TABLE OF CONTENTS

Introduction **3**

Safety Definitions **3**

Important Safety Instructions **4**

Fuel Safety 5
Training 6
Preparation 7
Operation 7
Maintenance, Transport and Storage 8
Safety and Dataplate Labels 9
Safety Symbols 11
Operation Symbols 13
Quickstart Label Symbols 13

Controls and Features **14**

Chipper-shredder 14
Engine 15
Parts Included 16

Assembly **17**

Unpacking 17
1) Install the Shredder Hopper Support Bracket 17
2) Install the Shredder Hopper 17
3) Install the Discharge Chute Deflector 17
Collection Bag 18
Add Engine Oil 18
Add Fuel 19

Operation **20**

Chipper-Shredder Location 20
Work Area 20
Before Each Use Inspect the Chipper-Shredder 21
Starting the Engine 21
Chipper-Shredder Operation 22
Chipping and Shredding Tips 23
Clearing the Shredder Hopper 23
Stopping the Engine 24
Operation at High Altitude 24

Maintenance **25**

Changing the Engine Oil 25
Cleaning and Adjusting the Spark Plug(s) 25
Clean the Air Filter 26
Chipper-Shredder Maintenance 26
Cleaning the Chipper-shredder 26
Inspect Chipping Blades 26
Repair 27
Maintenance Schedule 29

Storage **29**

Chipper-shredder Storage 29
Engine Stored for Less than 30 Days 29
Engines Stored for Over 30 Days 29

Specifications **30**

Chipper-shredder Specifications 30
Engine Specifications 30
Fuel Specifications 30
Engine Oil Specifications 30
Spark Plug Specifications 30
Valve Specifications 30
Important Message About Temperature 30

Troubleshooting **31**

FOR PARTS BREAKDOWN

Search by model number at
championpowerequipment.com

INTRODUCTION

Congratulations on your purchase of a Champion Power Equipment (CPE) product. CPE designs, builds, and supports all of our products to strict specifications and guidelines. With proper product knowledge, safe use, and regular maintenance, this product should bring years of satisfying service.

Every effort has been made to ensure the accuracy and completeness of the information in this manual at the time of publication, and we reserve the right to change, alter and/or improve the product and this document at any time without prior notice.

Since CPE highly values how our products are designed, manufactured, operated and are serviced, and also highly value your safety and the safety of others, we would like you to take the time to review this product manual and other product materials thoroughly and be fully aware and knowledgeable of the assembly, operation, dangers and maintenance of the product before use. Fully familiarize yourself, and make sure others who plan on operating the product fully familiarize themselves too, with the proper safety and operation procedures before each use. Please always exercise common sense and always err on the side of caution when operating the product to ensure no accident, property damage, or injury occurs. We want you to continue to use and be satisfied with your CPE product for years to come.

When contacting CPE about parts and/or service, you will need to supply the complete model and serial numbers of your product. Transcribe the information found on your product's nameplate label to the table below

CPE TECHNICAL SUPPORT TEAM
1-877-338-0999
MODEL NUMBER
201352
SERIAL NUMBER
DATE OF PURCHASE
PURCHASE LOCATION

SAFETY DEFINITIONS

The purpose of safety symbols is to attract your attention to possible dangers. The safety symbols, and their explanations, deserve your careful attention and understanding. The safety warnings do not by themselves eliminate any danger.
The instructions or warnings they give are not substitutes for proper accident prevention measures.

⚠ DANGER

DANGER indicates a hazardous situation which, if not avoided, will result in death or serious injury.

⚠ WARNING

WARNING indicates a hazardous situation which, if not avoided, could result in death or serious injury.

⚠ CAUTION

CAUTION indicates a hazardous situation which, if not avoided, could result in minor or moderate injury.

NOTICE

NOTICE indicates information considered important, but not hazard-related (e.g., messages relating to property damaged).

IMPORTANT SAFETY INSTRUCTIONS

⚠ DANGER

Engine exhaust contains carbon monoxide, a colorless, odorless, poison gas. Breathing carbon monoxide will cause nausea, dizziness, fainting or death. If you start to feel dizzy or weak, get to fresh air immediately.

Operate product outdoors only in a well ventilated area.

DO NOT operate the product inside any building, including garages, basements, crawlspaces and sheds, enclosure or compartment.

DO NOT allow exhaust fumes to enter a confined area through windows, doors, vents or other openings.

⚠ DANGER

Using an engine indoors **CAN KILL YOU IN MINUTES**. Engine exhaust contains carbon monoxide. This is a poison you cannot see or smell.

NEVER use inside a home or garage, **EVEN IF** doors and windows are open.

ONLY use **OUTSIDE** and far away from windows, doors, and vents.

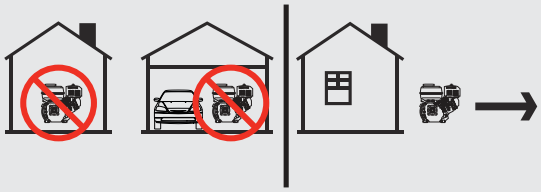

Install battery-operated carbon monoxide alarms or plug-in carbon monoxide alarms with battery back-up according to the manufacturer's instructions.

⚠ DANGER

Rotating parts can entangle hands, feet, hair, clothing and/or accessories. Traumatic amputation or severe laceration can result.

Keep hands and feet away from rotating parts.

Tie up long hair and remove jewelry.

Operate equipment with guards in place.

DO NOT wear loose-fitting clothing, dangling drawstrings or items that could become caught.

⚠ WARNING

Operation of this equipment may create sparks that can start fires around dry vegetation.

A spark arrestor may be required. The operator should contact local fire agencies for laws or regulations relating to fire prevention requirements.

⚠ WARNING

Sparks can result in fire or electrical shock.

When servicing the engine:

Disconnect the spark plug wire and place it where it cannot contact the plug.

DO NOT check for spark with the plug removed.

Use only approved spark plug testers.

⚠ WARNING

Running engines produce heat. Severe burns can occur on contact. Combustible material can catch fire on contact.

DO NOT touch hot surfaces.

Avoid contact with hot exhaust gases.

Allow equipment to cool before touching.

Maintain at least 3 ft. (91.4 cm) of clearance on all sides to ensure adequate cooling.

Maintain at least 5 ft. (1.5 m) of clearance from combustible materials.

⚠ WARNING

Bystander Hazard

Always keep bystanders, children and pets away a minimum distance of 75 ft. (22.9 m) from work area when chipper shredder is in use.

Always be alert. Accidents, injury or damage could occur due to ricochet and ejection of discharge debris from the chipper shredder while operating.

Be aware. Only a qualified adult with complete working knowledge of the product features and safety rules should operate the chipper-shredder and be in the work area.

⚠ WARNING

Ejection Hazard

Pieces of debris may be ejected from the chipper-shredder while operating. Be alert.

⚠ WARNING

Operator Work Zone Area

Keep work zone clear of debris while working to ensure safe footing.

⚠ WARNING

Protective Safety Gear and Clothing

Always wear close fitting clothing and ANSI Z87.1 approved eye protection worn at all times when operating the chipper-shredder.
Wear boots or sturdy shoes that will improve footing around slippery surfaces.

⚠ WARNING

Rapid retraction of the starter cord will pull hand and arm towards the engine faster than you can let go. Unintentional startup can result in entanglement, traumatic amputation or laceration. Broken bones, fractures, bruises or sprains could also result.

When starting engine, pull the starter cord slowly until resistance is felt, then pull firmly and rapidly to avoid kickback.

⚠ WARNING

Improper use or treatment of the chipper-shredder can damage it, shorten its life and void your warranty.

Always use the chipper-shredder only for intended uses. Operate only on level surfaces.

DO NOT expose chipper-shredder to excessive moisture or dirt.

DO NOT allow any material to block the cooling slots.

DO NOT use the engine if:

- Equipment sparks, smokes or emits flames
- Equipment vibrates excessively
- Equipment makes unusual sounds
- Equipment is damaged

⚠ WARNING

Although the chipper shredder contains a spark arrester, maintain a minimum distance of 5 ft. (1.5 m) from dry vegetation to prevent fires.

Fuel Safety

⚠ DANGER

GASOLINE AND GASOLINE VAPORS ARE HIGHLY FLAMMABLE AND EXPLOSIVE.

Fire or explosion can cause severe burns or death.

Gasoline and gasoline vapors:

- Gasoline vapors are highly flammable and explosive.
- Gasoline vapors can cause a fire or explosion if ignited.
- Gasoline is a liquid fuel and the resulting gasoline vapors can ignite and cause a fire or explosion.
- Gasoline is a skin irritant and needs to be cleaned up immediately if spilled on skin or clothes.
- Gasoline has a distinctive odor, this will help detect potential leaks quickly.
- In any petroleum gas fire, flames should not be extinguished unless by doing so the fuel supply valve can be turned OFF. This is because if a fire is extinguished and a supply of fuel is not turned OFF, then an explosion hazard could be created.
- Gasoline vapors expand and contract with ambient temperatures. Never fill the gasoline tank past the red FULL indicator on the fuel filter, as gasoline vapors needs room to expand if temperatures rise.

⚠ WARNING

When adding or removing gasoline:

Do not light or smoke cigarettes.

Always stop the engine and allow to cool for a minimum of two minutes before refueling.

Always loosen gasoline cap slowly to release vapor pressure and to keep fuel from escaping around the gasoline cap.

Always replace and tighten the gasoline cap securely after fueling.

Never remove the gasoline cap or add gasoline while the engine is running or when the engine is hot.

Only fill or drain gasoline outdoors in a well-ventilated area.

Do not pump gasoline directly into the chipper shredder at the gas station.

Always store gasoline in an EPA/CARB compliant container or to transfer the gasoline to the chipper shredder.

Do not overfill the gasoline tank.

Always keep gasoline away from sparks, open flames, pilot lights, heat and other sources of ignition.

⚠ WARNING

When starting the chipper shredder:

Do not attempt to start a damaged chipper shredder.

Always check that the gasoline cap, air filter, spark plug, fuel lines and exhaust system are properly in place.

Always allow spilled gasoline to evaporate fully before attempting to start the engine.

Always be certain that the chipper shredder is resting firmly on level ground.

⚠ WARNING

When operating the chipper shredder:

Do not move or tip the chipper shredder during operation.

⚠ WARNING

When transporting or servicing the chipper shredder:

Always check that the fuel valve is in the OFF position and the gasoline tank is empty.

Disconnect the spark plug wire.

⚠ WARNING

When storing the chipper shredder:

Store away from sparks, open flames, pilot lights, heat and other sources of ignition.

Do not store chipper shredder or gasoline near furnaces, water heaters, or any other appliances that produce heat or have automatic ignitions.

⚠ DANGER

Never place a gasoline container, gasoline tank, LPG cylinder or any combustible material in the path of the exhaust stream during operation of the engine.

⚠ WARNING

Never use a gasoline container, gasoline tank, or any other fuel item that is broken, cut, torn or damaged.

Training

1. Read the Operator's Manual completely before attempting to use this chipper-shredder.
2. Do not allow anyone to operate your chipper-shredder who has not read the Operator's Manual or has not been instructed on the safe use of the chipper-shredder.
3. Never allow children or untrained adults to operate this machine.
4. Many accidents occur when more than one (1) person operates the chipper-shredder. If a helper is assisting, never actuate controls until helper is clear of the area.
5. Never allow anyone to ride on the machine.
6. Never transport cargo on the chipper-shredder.
7. Projectiles can exit the chipper-shredder at high velocities. To prevent injury, use the following instructions:
   - Never operate the unit on asphalt or concrete.
   - Never operate the unit close to any buildings or walls.
   - Do not allow children, pets, bystanders, and assistants to be within 75 ft. (22.9 m) of the unit during operation.
   - Do not lean directly over any chute, entry or exit, during operation.
   - Keep the operator zone and adjacent area clear for safe, secure footing.

⚠ WARNING

Although the chipper shredder contains a spark arrester, maintain a minimum distance of 5 ft. (1.5 m) from dry vegetation to prevent fires.

- Chipper-shredders should be used only for chipping branches 3 in. (7.6 cm) or less in diameters or shredding vegetation with small diameter branches. Do not use for other purposes.
- Always make sure the spark plug wire is disconnected from the engine when not in use, and before cleaning or maintenance.

Preparation

1. Be thoroughly familiar with all controls and with proper use of the equipment.
2. Make sure the spark plug wire is disconnected until operation.
3. Safety Gear:
   - Always wear safety shoes or heavy boots when operating the machine.
   - Always wear safety glasses or goggles when operating the machine.
   - Never wear jewelry or loose-fitting clothing that might become entangled in moving or rotating parts of the machine.
   - Always wear hearing protection.
   - Tie back long hair or anything that will dangle and may get entangled.
4. Inspection:
   - Make sure the spark plug wire has been fully removed and the unit is grounded.
   - Make sure the chutes, chambers, and intakes/exits are all clean and free of any debris.
   - Make sure the work area is clean and has no obstacles or distractions.
   - Make sure all connections and parts are secure and undamaged.
   - Make sure collection bag is fully connected and secured when attached.
   - Make sure material to be chipped is less than 3 in. (7.6 cm) in diameter. Branches to be chipped can be pruned down.
   - Make sure material to be chipped or shredded is not damp or wet.
5. Check to make sure the chipper-shredder is on a level surface that is not asphalt, concrete or harden ground. Block the wheels and ensure support leg is secure to prevent unintended movement of the chipper-shredder during operation.
   - Always operate the chipper shredder from the manufacturer's indicated operator zone.
6. Fuel:
   - Use an approved fuel container.
   - Never add fuel to a running or hot engine.
   - Fill fuel tank outdoors with extreme care. Never fill fuel tank indoors.
   - Replace gasoline cap securely and clean up any spilled fuel.

Operation

1. Before starting this chipper-shredder, review all safety rules. Failure to follow these rules may result in serious injury to the operator or bystanders.
2. Be sure to confirm all hose connections and hose clamps are tight before each use. It is possible for connections to vibrate loose over time.
3. Never leave the machine unattended with the power source operating.
4. Never operate the machine when under the influence of alcohol, drugs or medication.
5. The machine owner should instruct all operators in safe chipper-shredder operation.
6. Always operate the chipper-shredder with all safety equipment in place and all controls properly adjusted for safe operation.
7. Always operate the chipper-shredder at manufacturer's recommended speed.
8. Always keep hands and feet clear of moving parts.
9. When loading the chipper-shredder, never place your hands inside or on the sides of the chutes, chambers, or intake. Never place your hands or any part of your body between the material and any part of the chipper-shredder.
   - Never attempt to chip more than one (1) branch at a time, this may cause the chute, chamber or intake to become clogged.
   - Never attempt to use your hand, foot or any body part to unclog the chipper-shredder.

- Only attempt to unclog with a small diameter stick that can get chipped.
- If a major clog occurs; turn the fuel valve off and let the unit run until dry, turn off the engine, let the unit cool down, unplug the spark plug wire and take apart the unit to see where the clog has occurred. Remove clog before further operation.

10. Only chip branches 3 in. (7.6 cm) or less in diameter.
11. Only shred bushes, shrubbery, leaves, etc. with branches ½ in. (1.3 cm) or less in diameter.
12. Only shred dry or slightly damp material. Never attempt to shred material that is wet, as this may cause clogging to occur.
13. Use only your hand to operate the chipper-shredder controls.
14. Do not refuel the engine until it has cooled for several minutes.

Maintenance, Transport and Storage

1. Always shut off the power source and disconnect the spark plug wire and ground the engine while repairing or adjusting the unit.
2. Clean debris, shrubbery and chaff from the engine cylinder, cylinder head fins, blower house rotation screen, and muffler areas. If the engine is equipped with a spark arrestor muffler, clean and inspect it regularly (follow manufacturer's service instructions). Replace, if damaged.
3. Never store the unit (with fuel) in an enclosed poorly ventilated structure. Fuel vapors can travel to an ignition source (such as a furnace, water heater, etc.) and cause an explosion. Fuel vapor is also toxic to humans and animals.
4. Clear debris from movable parts, but only when the engine is off, the fuel valve is in the "OFF" position, and the spark plug wire is disconnected.
5. Check to be sure all nuts and bolts are tight to assure the equipment is in safe working condition.
6. Always use the shredder hopper handle and built-in wheels to move the chipper shredder. Never lift the unit using the fuel tank for support. If the unit must be lifted , always use at least two people, and always grip the unit securely using the front leg and shredder hopper handle.
7. Always follow the engine instructions for storage preparations before storing the unit for both short and long term periods.
8. Always ensure that the fuel tank is empty before transporting the unit in a vehicle.
9. Always transport the unit in the upright position on the wheels and support leg.

Safety and Dataplate Labels

These labels warn you of potential hazards that can cause serious injury. Read them carefully.

If a label comes off or becomes hard to read, contact Technical Support Team for possible replacement.

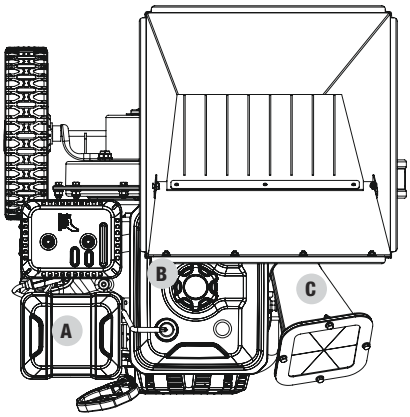

Top

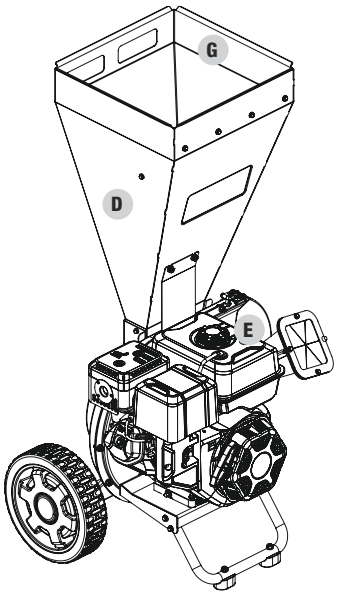

Side

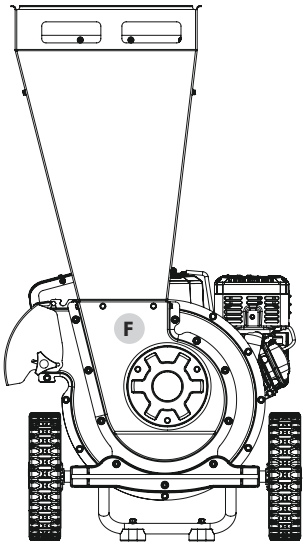

Back

	LABEL	DESCRIPTION
A		Hot Surface
B	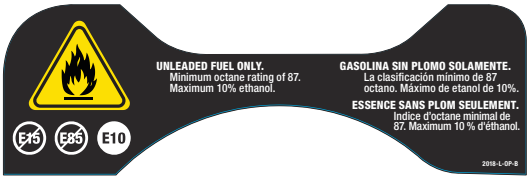	Fuel
C		Warning Icon - chipper chute
D		Danger Icon - shredder hopper outside

	LABEL	DESCRIPTION
E		Danger icon - discharge
F		Warning - Clean-out access
G		Shredder hopper inside
	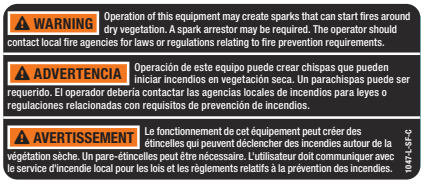	Combustion (not shown in diagram)
		Safety icons (not shown in diagram)

Safety Symbols

Some of the following symbols may be used on this product. Please study them and learn their meaning. Proper interpretation of these symbols will allow you to more safely operate the product.

SYMBOL	MEANING
	Read Operator's Manual. To reduce the risk of injury, user must read and understand operator's manual before using this product.
	Eye and Ear Protection. Always wear safety goggles or safety glasses with side shields, and as necessary a full face-shield as well as full ear protection when operating this product.
	Footwear. Always wear safety shoes or heavy boots when operating the machine.
	Gloves. Always wear nonslip, heavy-duty protective gloves when operating this product.
	Danger Alert. Indicates a hazardous situation which, if not avoided, will result in death or serious injury.
	Risk of Fire. Fuel and its vapors are extremely flammable and explosive. Fire can cause severe burns or death. Do not add fuel while the product is operating or still hot.
	Hot Surface. To reduce the risk of injury or damage, avoid contact with any hot surface
	Open Flame alert. Fuel and its vapors are extremely flammable and explosive. Keep fuel away from smoking, open flames, sparks, pilot lights, heat, and other ignition sources.

SYMBOL	MEANING
	Amputation Hazard. Contact with rotating blades will cause serious injury. Keep hands out of openings while machine is running.
	Toxic Fumes. The engine exhaust from this product contains chemicals known to the state of California to cause cancer and birth defects and other reproductive harm. **Risk of Asphyxiation.** This engine emits carbon monoxide, an odorless, colorless poison gas. Breathing carbon monoxide can cause nausea, fainting or death. Use only in a well ventilated area.
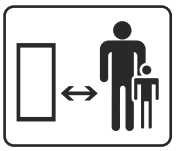	**Clearance.** Keep all objects including others at least 10 feet (3m) from this machine. Only one person should operate the chipper-shredder and load the logs
	Never operate on an incline. Make sure the chipper-shredder is on a level surface. Block tires and ensure support leg is secure to prevent unintended movement of the chipper-shredder during operation.
	Thrown Objects. This machine may pick up and throw objects which can cause personal injury.
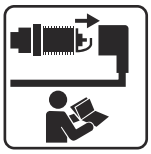	**Serious Personal Injury or Property Damage.** Before inspecting, cleaning or servicing the machine, shut of the engine, wait for all moving parts to come to a complete stop, disconnect the spark plug wire and move it away from the spark plug.

Operation Symbols

Some of the following symbols may be used on this product. Please study them and learn their meaning. Proper interpretation of these symbols will allow you to more safely operate the product.

SYMBOL	MEANING
	Gasoline Tank: Full
	Gasoline Tank: Empty

SYMBOL	MEANING
	Choke Lever CHOKE: left position RUN: right Position
	Fuel Lever CLOSED: left position OPEN: right Position

Quickstart Label Symbols

Some of the following symbols may be used on this product. Please study them and learn their meaning. Proper interpretation of these symbols will allow you to more safely operate the product.

Starting the Engine

⚠ DANGER

Move chipper-shredder outside and far away from windows, doors and intake ventilation covers.

1. **Check oil level.**
   Recommended oil is 5W-30.
2. Move the **fuel valve** to the “OPEN” position.
3. Press the **engine switch** to the “ON” position.
4. Move the **choke lever** to the “CHOKE” position.
5. Pull the starter cord.
6. Move the **choke lever** to the “RUN” position.

Stopping the Engine

1. Move the **fuel valve** to the “CLOSED” position.
2. Move the **engine switch** to the “OFF” position.

CONTROLS AND FEATURES

Read this operator's manual before operating your chipper-shredder. Familiarize yourself with the location and function of the controls and features. Save this manual for future reference.

Chipper-shredder

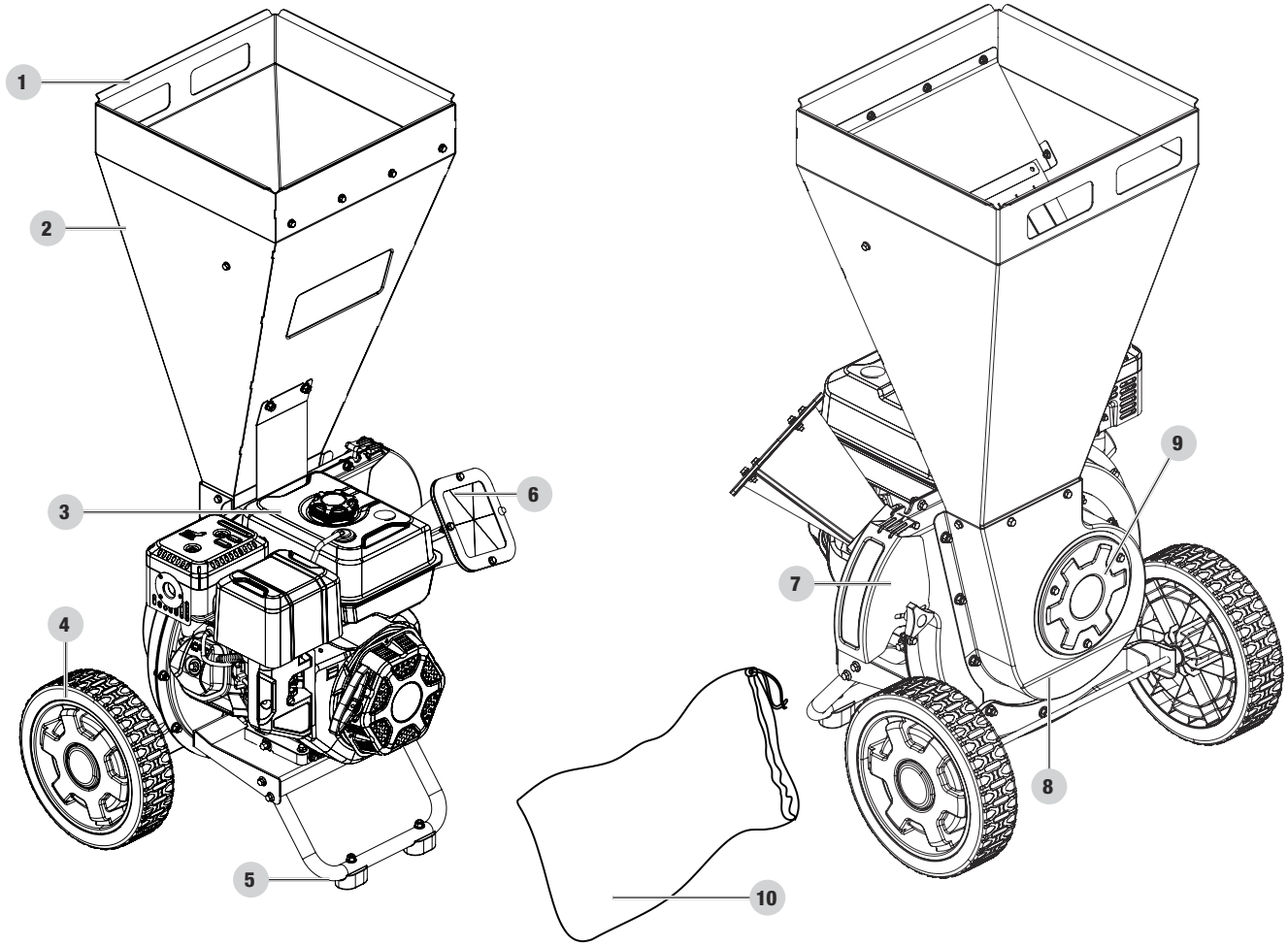

1. **Handle**
2. **Shredder Hopper –** place shreddable material (leaves, sticks, and yard debris) up to 0.5 in. (1.3 cm) maximum diameter in this chute.
3. **Engine –** 338 cc, OHV, 4-stroke, air cooled.
4. **Wheels –** 12 in. (30.5 cm) never flat.
5. **Support Leg with Vibration Mount –** used to help stabilize the unit.
6. **Chipper Chute –** place sticks and branches up to 3 in. (7.6 cm) maximum diameter in this chute.
7. **Chute Deflector –** chipped or shredded material will exit from this.
8. **Flail Housing –** housing for chipper shredder blades.
9. **Clean-out Port –** remove this panel to clear any jams you may encounter.
10. **Collection Bag –** 2 Bushels (70 L) - Attach to the chute deflector (7) to collect chipped and shredded material.

Engine

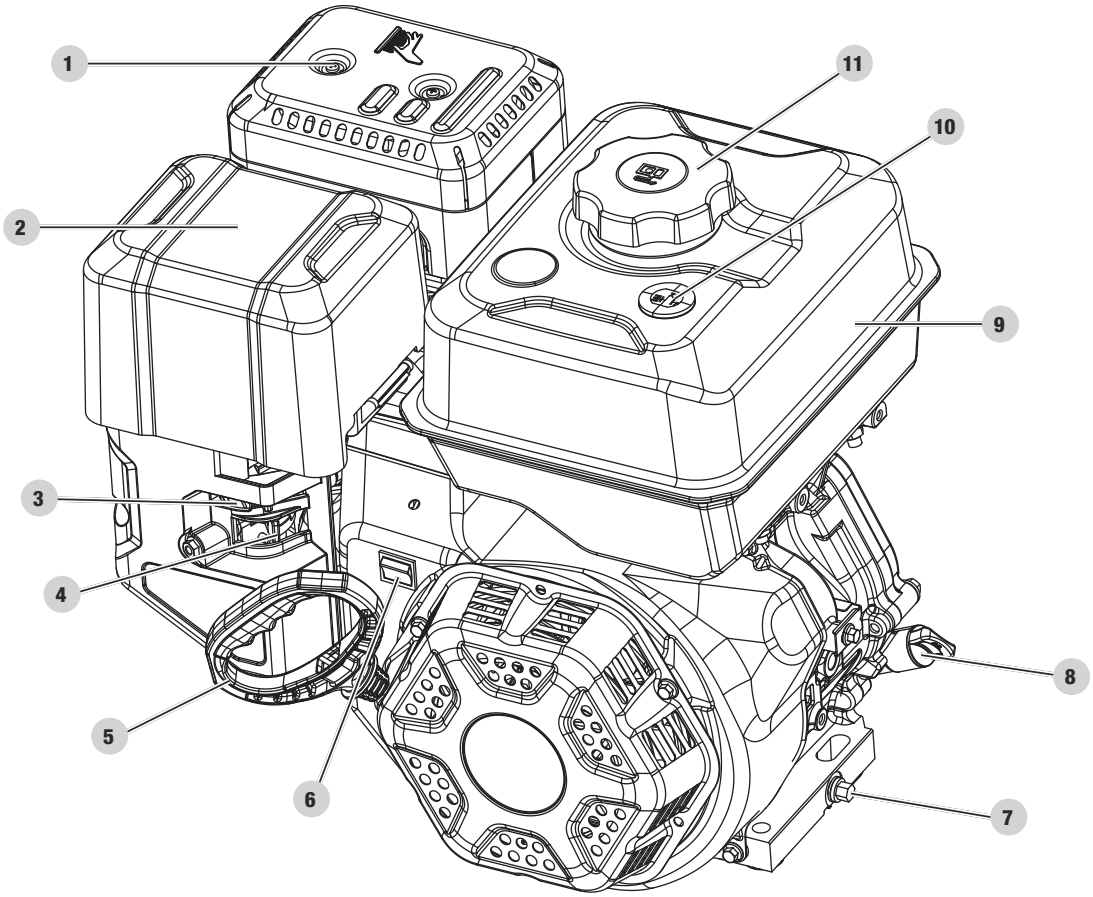

1. **Muffler**
2. **Air Filter** – Protects the engine by filtering dust and debris from the intake air.
3. **Choke** – Used to start the engine.
4. **Fuel Valve** – Used to turn fuel supply on and off to engine.
5. **Recoil Starter** – Used to manually start the engine.
6. **Engine ON/OFF Switch** – Used to START and STOP the engine.
7. **Oil Drain Bolt** – Used to drain the oil from the engine.
8. **Oil Fill Cap/Dipstick** – Used to check and fill oil level.
9. **Gasoline Tank** – 1.45 gal. (5.5 L)
10. **Gasoline Gauge**
11. **Fuel Cap** – Remove to add fuel.

Parts Included

Part	Part Qty.	Hardware Needed	Hardware Qty.	Tool Needed
Hopper Support Bracket	1	Flange Bolt M8 × 20	2	1× 12 mm wrench or socket
		Lock Nut M8, Flange	2	1× 12 mm wrench or socket
		Lock Nut M6, Flange	2	1× 10 mm wrench or socket
Shredder Hopper	1	Flange Bolt M6 × 12	4	1× 10 mm wrench or socket
Discharge Deflector	1	Lock Nut, M6	1	1× 10 mm wrench or socket
		Flange Bolt, M6 x 55	1	1× 10 mm wrench or socket
		Knob, M6	2	
Collection Bag	1	n/a		
Oil Funnel	1	n/a		
Engine Oil 37.2 fl. oz (1100 ml)	1	n/a		

ASSEMBLY

Your chipper-shredder requires some assembly. This unit ships from our factory without oil. It must be properly serviced with fuel and oil before operation.

If you have any questions regarding the assembly of your chipper-shredder, call our Technical Support Team at 1-877-338-0999. Please have your serial number and model number available.

Unpacking

1. Set the shipping crate on a solid, flat surface.
2. Carefully cut the shipping bands and remove lid of shipping crate.
3. Locate all hardware before beginning assembly.

1) Install the Shredder Hopper Support Bracket

1. With the angled part of the bracket pointing towards the engine, align the holes of the bracket with the holes on the top of the flail housing.
2. Insert two M8 × 20 flange bolts through the holes on the flail housing and shredder hopper support bracket from the flail housing side.
3. Thread two M8 lock nuts onto the flange bolts and tighten securely using 12mm and 13mm sockets or wrenches.

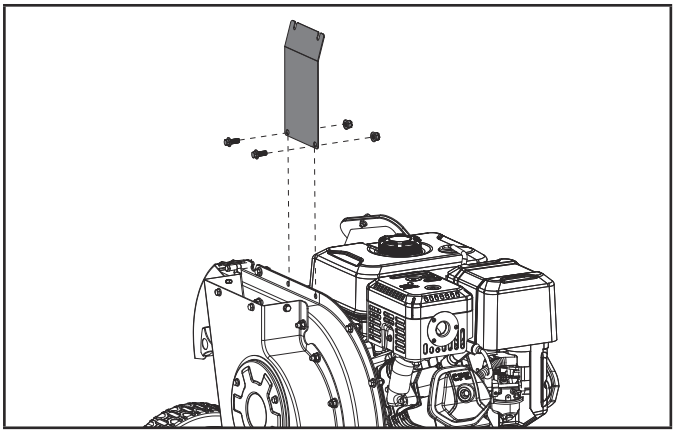

2) Install the Shredder Hopper

1. Insert the shredder hopper into the top of the flail housing with the handle slot cutouts facing the rear of the unit (towards the wheels). Slide the threaded studs on the angled part of the shredder hopper into the slots on the shredder hopper support bracket that was installed in step 3 while also ensuring that the slots on the bottom of the shredder hopper slide over the locator pins that are inside the flail housing. Ensure that the four holes on the shredder hopper are aligned with the 4 holes on the flail housing (1 on either side and 2 on the rear).
2. Thread two M6 lock nuts onto the threaded studs to secure the shredder hopper to the shredder hopper support bracket and tighten securely using a 10mm socket or wrench.
3. Insert four M6 × 12mm flange bolts through the four holes of the flail housing and into the weld nuts in the shredder hopper. Tighten securely with a 10mm socket or wrench.

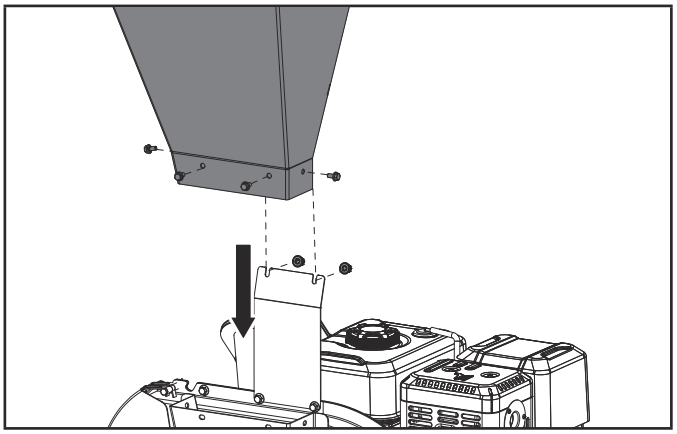

3) Install the Discharge Chute Deflector

1. Align the hinge on the top of the chute deflector with the tab on top of the discharge chute so the tab is aligned in the slot in the middle of the hinge.
2. Insert the M6 × 55mm flange bolt through the hinge and tabs with holes on the top of the discharge chute.
3. Thread the M6 lock nut onto the threaded stud to secure the chute deflector to the discharge chute.
4. From both sides, insert a knob bolt through the slotted hole on the chute deflector and into the threaded hole on the discharge chute. Select your desired position for the chute deflector and then hand tighten the knob bolts to secure the chute deflector in place.

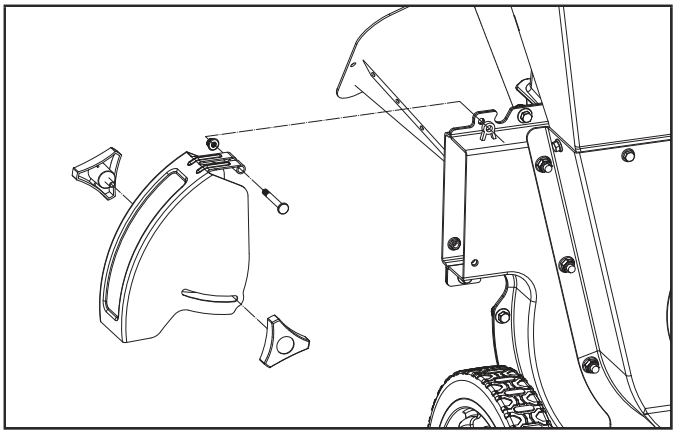

Collection Bag

The collection bag can be attached and removed from the chute deflector using the adjustable drawstring. It is recommended to be attached before operation and removed before completely full, after operation, or before storage. The collection bag will collect up to 2 bushels (70 L) of material.

⚠ WARNING

Before operation, ensure the adjustable drawstring is tight around the chute deflector and secure.

⚠ WARNING

When the collection bag appears to be almost full, it is recommended to empty it. This will help to keep the bag from becoming dislodged from the deflector chute and will also prevent the bag from bursting. Do not allow the collection bag to become dislodged from the deflector chute during operation. If this occurs, stop operation at once and reconnect the collection bag. Always empty the collection bag when the engine is off and the spark plug has been disconnected.

NOTICE

Always inspect the collection bag prior to use. Do not use a frayed, worn, or damaged collection bag.

Add Engine Oil

⚠ WARNING

DO NOT attempt to crank or start the engine before it has been properly filled with the recommended type and amount of oil. Damage to the engine as a result of failing to follow these instructions will void your warranty.

NOTICE

The engine rotor has a sealed, pre-lubricated ball bearing that requires no additional lubrication for the life of the bearing.

NOTICE

The recommended oil type for typical use is **5W-30 automotive oil**. However, using the listed conventional oils shown in the “Recommended Engine Oil Type” chart may be used for typical use including the first 5 hours of the break-in run time period of the engine.

If running engine in extreme temperatures, refer to the “Recommended Engine Oil Type” chart.

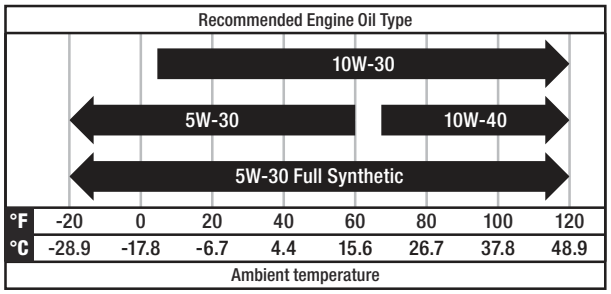

1. Place the chipper-shredder on a flat, level surface.
2. Remove oil fill cap/dipstick to add oil.

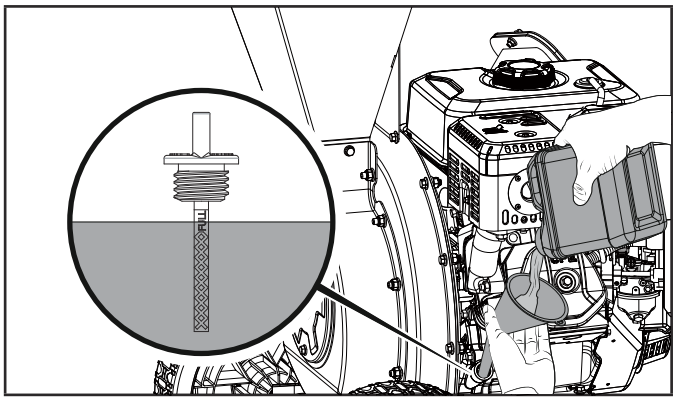

3. Using a funnel, add up to 37.2 fl. oz (1100 ml) of oil (included) and replace oil fill cap/dipstick. DO NOT OVERFILL.
4. Check engine oil level before every use and add as needed.

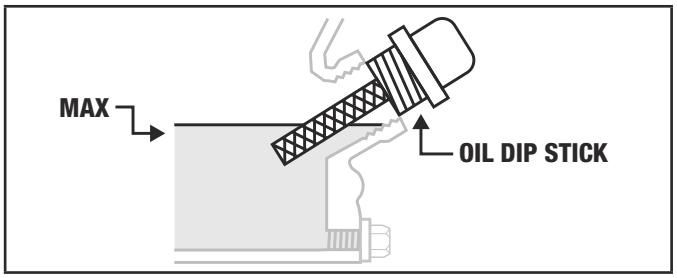

NOTICE

Once oil has been added, a visual check should show oil about 1-2 threads from running out of the fill hole.

If using the dipstick to check oil level, DO NOT screw in the dipstick while checking.

NOTICE

Check oil often during the break-in period. Refer to the *Maintenance* section for recommended service intervals.

CAUTION

The engine is equipped with a low oil shut-off and will stop when the oil level in the crankcase falls below the threshold level.

NOTICE

We consider the first 5 hours of run time to be the break-in period for the engine. During the break in period we recommend using standard automotive non-synthetic blended oils. After the break in period synthetic lubricant can be used but is not required. Avoid bogging or lugging the engine down and avoid prolonged running at constant RPM. After the 5 hour break-in period, change the oil.

NOTICE

Synthetic oil may be used after the 5 hour initial break-in period. Using synthetic oil does not decrease the recommended oil change interval. Full synthetic 5W-30 oil will aid in starting in cold ambient < 41º F (5º C).

Add Fuel

DANGER

Gasoline vapors are highly flammable and extremely explosive.

DO NOT light or smoke cigarettes. Fire or explosion can cause severe burns or death.

Only fill or drain fuel outdoors in a well-ventilated area. DO NOT pump gasoline directly into the engine. Use an approved container to transfer the fuel to the engine.

Never use a gasoline container, gasoline tank, or any other fuel item that is broken, cut, torn or damaged.

DO NOT overfill the gasoline tank. Always keep fuel away from sparks, open flames, pilot lights, heat and other sources of ignition.

Use clean, fresh, regular unleaded gasoline with a minimum octane rating of 87 and an ethanol content of 10% or less by volume. E10 E15 E85

DO NOT mix oil with gasoline.

1. Remove the gasoline cap.
2. Slowly add gasoline to the tank. DO NOT OVERFILL. A minimum of ¼ in. (6.4 mm) of space left in the tank is required for gasoline expansion, although more than ¼ in. (6.4 mm) is recommended. If overfilled, gasoline can be forced out of the fuel tank as a result of expansion and can affect the stable running condition of the chipper-shredder.

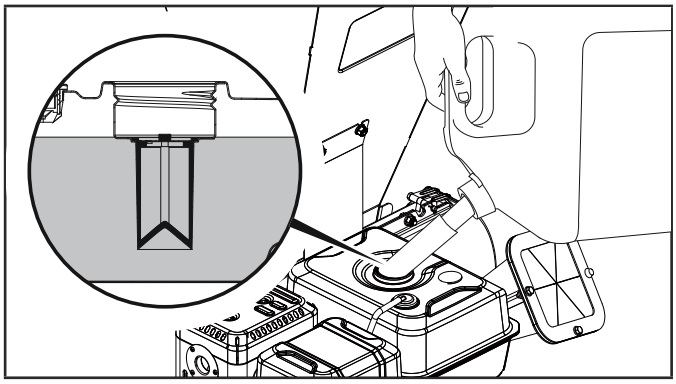

3. Screw on the gasoline cap and wipe away any spilled fuel.

⚠ CAUTION

Use regular unleaded gasoline with a minimum octane rating of 87 and an ethanol content of less than 10% by volume.

DO NOT light cigarettes or smoke when filling the tank.

DO NOT mix oil and gasoline.

DO NOT overfill the fuel tank. Always fill the fuel tank to approximately ¼ in. (6.4 mm) below the top of the tank to allow for gasoline expansion.

DO NOT pump gasoline directly into the chipper-shredder at the pump. Use an approved container to transfer the gasoline to the chipper-shredder.

DO NOT fill fuel tank indoors.

DO NOT fill tank when the engine is running or hot.

⚠ WARNING

Pouring gasoline too fast through the fuel screen may result in blow back of gasoline at the operator while filling.

NOTICE

The engine works well with 10% or less ethanol blended gasoline. When using ethanol-gasoline blends there are some issues worth noting:

- Ethanol-gasoline blends can absorb more water than gasoline alone.
- These ethanol blends can eventually separate, leaving water or a watery goo in the tank, fuel valve and carburetor. The compromised gasoline can be drawn into the carburetor and cause damage to the engine and/or create potential hazards.
- If a fuel stabilizer is used, confirm that it is formulated to work with ethanol-gasoline blends.
- Any damages or hazards caused by using ethanol blended gasoline higher than 10% by volume, improperly stored gasoline, and/or improperly formulated stabilizers, are not covered by manufacturer's warranty.

It is advisable to always shut off the gasoline supply and run the engine to starvation after each use. See storage instructions for extended non-use.

OPERATION

Chipper-Shredder Location

Never operate the chipper-shredder indoors or inside any confined spaces, enclosures or buildings; including garages, basements, and sheds. The chipper-shredder must have at least 5 ft. (1.5 m) of clearance on all sides from combustible materials at all times. The chipper-shredder must also have 3 ft. (91.4 cm) or more of clearance on all sides of the at all times to allow for adequate cooling, maintenance and servicing. Chipper-shredders should never be started or operated in the bed of a truck (regular, flat or otherwise), under staircases/stairwells, next to walls or buildings, or in any other location that will not allow for adequate cooling of the unit and/or the muffler, or adequate safety to the operator, assistants, or bystanders. Place the chipper-shredder in a well-ventilated area. DO NOT place the chipper-shredder near vents or intakes where exhaust fumes could be drawn into occupied or confined spaces. Carefully consider wind and air currents when positioning the unit. Allow the unit to properly cool before transport or storage. The chipper-shredder needs to be on a dry level surface with good footing. (Even while not in operation) DO NOT work on mud, ice, tall grass, brush or snow. DO NOT work on asphalt, brick, rock, concrete or other harden surfaces. DO NOT position the unit next to or facing any buildings, walls or fences, that could cause any projectiles to ricochet back at the operator or bystanders.

⚠ WARNING

During operation the muffler and exhaust fumes produced will become hot. If adequate cooling and breathing space are not supplied, or if the chipper-shredder is blocked or contained, temperatures can become extremely heated and may lead to fire.

Work Area

Before each use, always inspect the chipper shredder for damaged or loose parts and always operate the chipper-shredder outdoors in a large, open area on solid ground that will allow for good footing and ventilation. To prevent injury, always keep a clear area around the chipper-shredder at all times. Always ensure no pets, children or bystanders are in the immediate or surrounding areas at any time. Debris and projectiles can be launched within a 75 ft. (22.9 m) in diameter in all directions surrounding the chipper-shredder. Assistants must also be out of the immediate and surrounding areas while chipping or shredding is being performed. The operator must be in the "Safe Zone" at all times when the spark plug wire is connected and/or the engine is on.

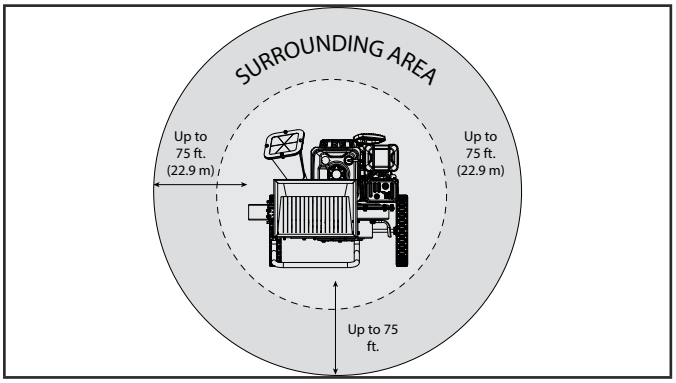

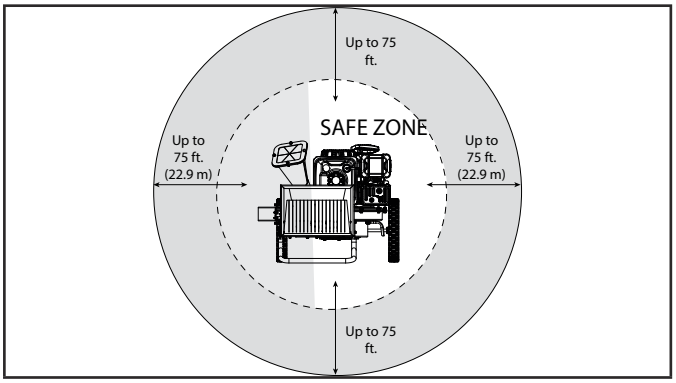

⚠ WARNING

Do not lean over or reach across the shredder chute when engine is running. Never stand directly in front of the chipper chute or deflector chute. Debris and projectiles may be discharged through these areas and may cause damage or injury.

Before Each Use Inspect the Chipper-Shredder

1. Always make sure the spark plug wire has been disconnected and engine has been grounded.
2. Always visually inspect all attachments and chutes for loose fittings, cracks, fraying or other damage.
3. DO NOT operate the chipper-shredder if there is any indication of damage to parts or the unit.
4. DO NOT operate the chipper-shredder if there are any clogged chutes. Remove all debris before operation.
5. Always inspect the engine and make sure the oil level and fuel level are correct before operating.
6. Always clean and inspect the spark arrestor regularly (follow spark arrestor maintenance schedule).
7. Always inspect the collection bag for any fraying, holes or damage. Never use a damaged collection bag.
8. Always inspect the work area for any distractions or factors that may prevent operator safety or proper operation.

⚠ WARNING

DO NOT operate a damaged chipper-shredder, or one with damaged or loose parts. Operating a damaged unit or one with loose parts may cause damage to the product or injury to the user. Make sure all parts are in good condition and secure before operation.

Starting the Engine

1. Make certain the chipper-shredder is on a flat, level surface.
2. Push the engine switch to the “ON” position.

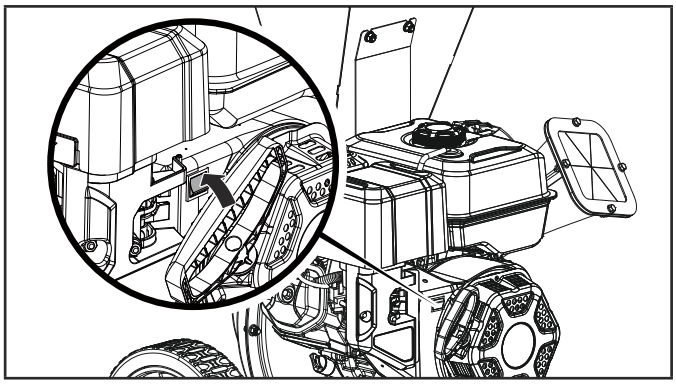

3. Move the choke lever to the “CHOKE” position.

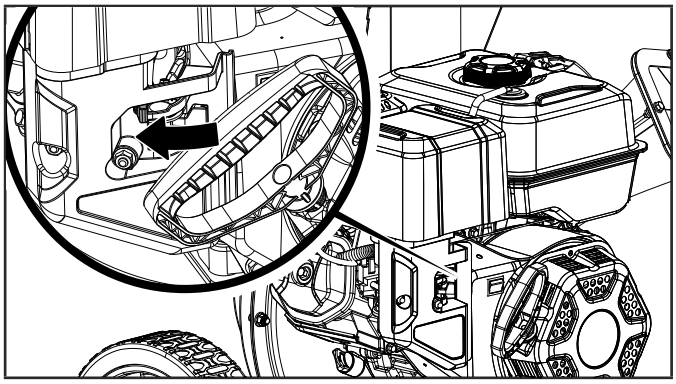

4. Move the fuel valve to the “ON” position.

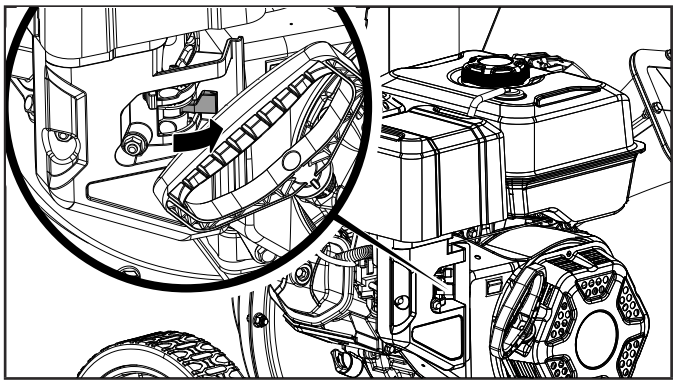

5. Pull the starter cord slowly until resistance is felt and then pull rapidly.

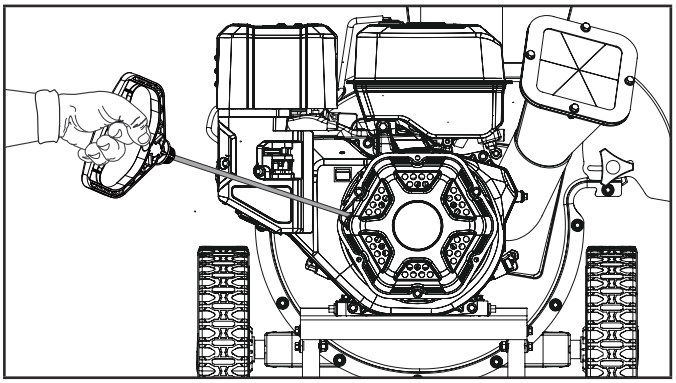

6. As engine warms up, move the choke lever to “RUN.”

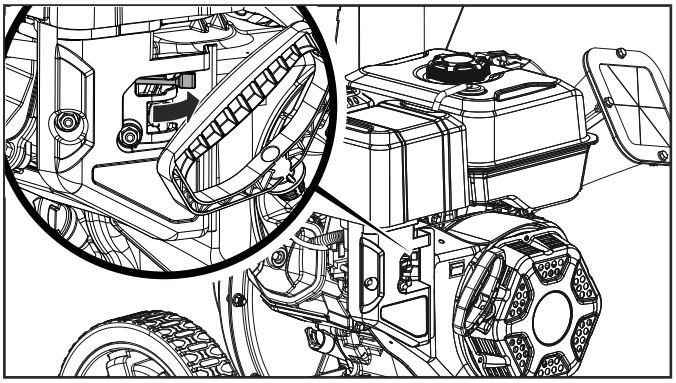

NOTICE

Keep choke lever in “CHOKE” position for only 1 pull of the recoil starter. After first pull, move choke lever to the “RUN” position for up to the next 3 pulls of the recoil starter. Too much choke leads to spark plug fouling/engine flooding due to the lack of incoming air. This will cause the engine not to start.

NOTICE

If the engine starts but does not run make certain that the chipper-shredder is on a flat, level surface. The engine is equipped with a low oil sensor that will prevent the engine from running when the oil level falls below a critical threshold.

NOTICE

Pulling the recoil cord will spin the impeller and this will make noises. These noises are normal and should be made as the cord is pulled and the impeller spins.

Chipper-Shredder Operation

DANGER

This machine has rotating blades and parts capable of amputating body parts. This machine can also throw objects at high velocity and long distances. Exercise extreme caution when operating the chipper-shredder. NEVER insert body parts or foreign object into any chute at any time. Never look directly into any chute, as projectiles can backfire.

1. ALWAYS wear ear and eye protection, protective shoes and clothing.

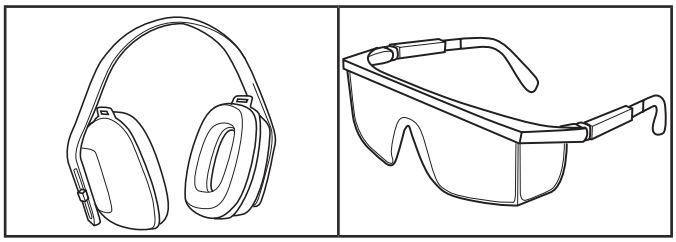

2. Block tires to prevent unintended movement of the chipper-shredder during operation.
3. Tie back long hair. Do not wear loose fitting clothing or jewelry.
4. Make sure surrounding and immediate and safe zones are clear of distractions and debris.
5. Do not attempt to chip or shred material that is larger than specified. This may damage the unit or cause injury.
6. Make sure the materials that are going to be chipped or shredded are free of any rocks, trash, metals and other foreign objects.
7. Make sure wood to be chipped has been “trimmed” down and do not have any excessive branches.
8. Make sure wood to be chipped or leaves/brush to be shredded are not “wet” as this may clog the chutes.
9. Keep all chutes, deflectors and guards assembled and in place at all times.

WARNING

If the impeller or blades strike a foreign object, stop engine immediately. Do not continue use until chutes and unit have been thoroughly inspected. Do not attempt to unclog any jam or chute while engine is on or spark plug wire is connected.

⚠ WARNING

ALWAYS use the chipper-shredder for its intended uses only. The chipper-shredder should only be used to chip branches 3 in. (7.6 cm) or less in diameter, or to shred leaves and brush.

DO NOT chip anything that is larger than 3 in. (7.6 cm) in diameter.

NEVER modify, alter or change the chipper-shredder design in anyway. Unauthorized modifications will void the warranty and may result in damage or injury.

DO NOT modify or change the engine and operating speeds. Making these unauthorized changes is a Federal violation, will void your warranty and will create safety performance conditions.

ONLY operate the chipper-shredder in daylight.

NEVER operate, or let anyone else operate, the chipper-shredder while under the influence of alcohol, drugs, or medication.

NEVER leave the chipper-shredder unattended while the engine is running. Avoid contact with the muffler, as it can cause serious burns.

NOTICE

Always be aware of who and what is in the immediate and surrounding areas of the chipper-shredder. Operators should always work in the SAFE ZONE only.

Chipping and Shredding Tips

Chipping

1. Make sure wood is less than 3 in. (7.6 cm) in diameter.
2. Make sure wood is dry.
3. Make sure all smaller branches have been pruned for the wood.
4. Make sure pieces are long enough to be fed through the chute.
5. Large pieces can be rotated and alternately inserted and retracted as they are fed.
6. Always maintain control with two hands of what is being fed, to prevent “whipping” around.
7. Standing in the safe zone will prevent any damage or injury if a piece is kicked back out of the chipper chute.

⚠ WARNING

Never insert pieces larger than 3 in. (7.6 cm) in diameter as this may cause damage or injury.

Small pieces may be fed carefully using a larger piece. Never insert smaller pieces using your hands.

If larger pieces will not chip, get pushed backed by the chipper, or can not be controlled, remove at once.

Never feed more than one branch or piece of wood into the chipper chute at a time.

Shredding

1. Inserting smaller loads at a time will prevent overloading of the shredder hopper.
2. Make sure material is dry.
3. Make sure material is free of trash, metal, rocks, and foreign objects.
4. Air flow will draw loads into the shredder hopper, pushing or shoving the loads is not necessary.
5. Branches larger than ½ in. (1.3 cm) in diameter are not recommended, as they can damage the blades.
6. Vines are not recommended as they can clog or damage the blades.

⚠ WARNING

Never insert any item into the shredder hopper to “assist” in the feeding of any load.

Never insert wet material into the shredder hopper. If material is “damp” then alternate with dry loads to prevent clogging.

NOTICE

After all material has been processed it is recommended that the unit run for short period of time to clear out any left over material that may still be in the chutes or flail housing.

Clearing the Shredder Hopper

If the shredder hopper gets slightly clogged, then firmly grasp the handle and gently rock the unit back and forth to try and dislodge or shift the material that may be causing the clog. This may help to loosen and draw the material into the flail housing and impeller. If slightly rocking the unit fails then perform the following:

1. Stop the engine.
2. Turn the fuel valve to the “OFF” position.
3. Disconnect the spark plug wire.

4. Using your hands, remove the material that is still atop the shredding chute. DO NOT stick your hands in the shredder hopper, only remove the material on top.
5. Using a branch, or other piece of wood less than ½ in. (1.3 cm) in diameter try and dislodge the material.
6. Once cleared, remove the branch, reconnect the spark plug wire, turn the fuel valve "ON," and restart the engine.

NOTICE

If the clog appears to be serious, then shut the engine off, disconnect the spark plug wire, and allow the unit to cool before draining the fuel and opening the access panel to the impeller housing to remove the clogged material.

Stopping the Engine

In an emergency, turn the engine switch to the "OFF" position.

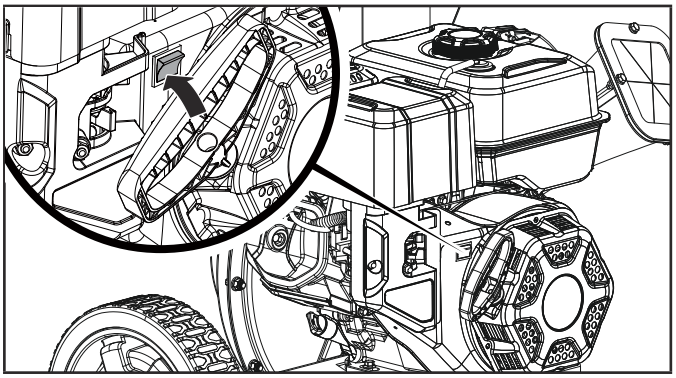

Under Normal Operation

1. Move the fuel valve to the "OFF" position.

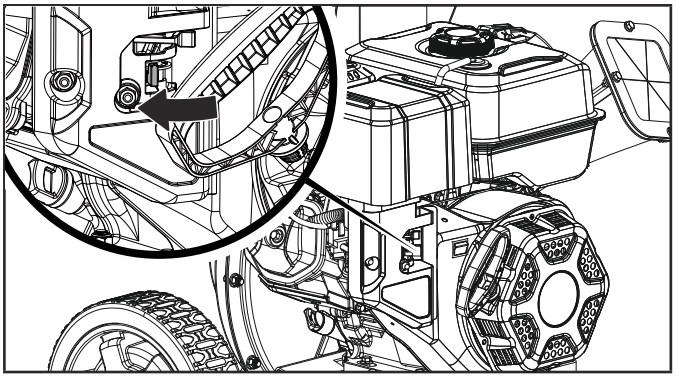

2. Let the engine run until fuel starvation has stopped the engine. This usually takes a few minutes.
3. Push the engine switch to the "OFF" position.

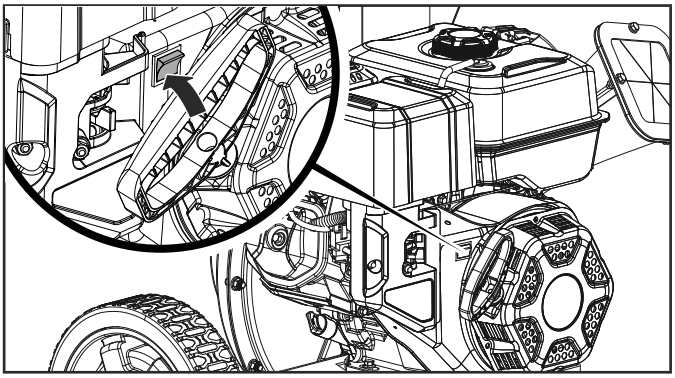

Important: Always ensure that the fuel valve is in the "OFF" position when the engine is not in use.

NOTICE

If the engine will not be used for a period of two (2) weeks or longer, please see the Storage section for proper engine and fuel storage.

NOTICE

As the engine shuts off and the blades wind down, some noises in the flail housing can be made, these are normal, but any weird noises may be damage and if these occur the unit should be inspected.

Operation at High Altitude

The density of air at high altitude is lower than at sea level. Engine power is reduced as the air mass and air-fuel ratio decrease. Engine power and chipper-shredder output will be reduced approximately 3½% for every 1000 ft. of elevation above sea level. This is a natural trend and cannot be changed by adjusting the engine. At high altitudes increased exhaust emissions can also result due to the increased enrichment of the air fuel ratio. Other high altitude issues can include hard starting, increased fuel consumption and spark plug fouling.

To alleviate high altitude issues other than the natural power loss, CPE can provide a high altitude carburetor main jet. The alternative main jet and installation instructions can be obtained by contacting our Technical Support Team. Installation instructions are also available in the Technical Bulletin area of the CPE website.

The part number and recommended minimum altitude for the application of the high altitude carburetor main jet is listed in the table below.

In order to select the correct high altitude main jet it is necessary to identify the carburetor model. For this purpose, a code is stamped on the side of the carburetor. Select the correct high altitude jet part number corresponding to the carburetor code found on your particular carburetor.

Carb. Code	High Alt. Jet Part Number	Min. Altitude
16100-000047	16161-000039	3000-6000 ft. (914.4-1828.8 m)
	16161-000038	6000-8000 ft. (1828.8-2438.4 m)

⚠ WARNING

Operation using the alternative main jet at elevations lower than the recommended minimum altitude can damage the engine. For operation at lower elevations, the originally supplied standard main jet must be used. Operating the engine with the wrong engine configuration at a given altitude may increase its emissions and decrease fuel efficiency and performance.

MAINTENANCE

⚠ WARNING

Always disconnect the spark plug wire during times of inactivity, cleaning and maintenance. This will prevent any accidental start up that may cause damage or injury.

⚠ WARNING

Never operate a damaged or defective chipper-shredder.

⚠ WARNING

Improper maintenance will void your warranty.

NOTICE

For Emission control devices and systems, read and understand your responsibilities for service as stated in the Emission Control Warranty Statement of this manual.

The owner/operator is responsible for all periodic maintenance.

Complete all scheduled maintenance in a timely manner.

Correct any issue before operating the chipper shredder.

For service or parts assistance, contact our Technical Support Team at 1-877-338-0999.

To prevent accidental starting, remove and ground spark plug wire before performing any service.

Changing the Engine Oil

Change oil when the engine is warm. Refer to the oil specification to select the proper grade for your operating environment.

1. Remove the oil drain plug with a 10 mm socket and extension. (Not included)
2. Allow the oil to drain completely.

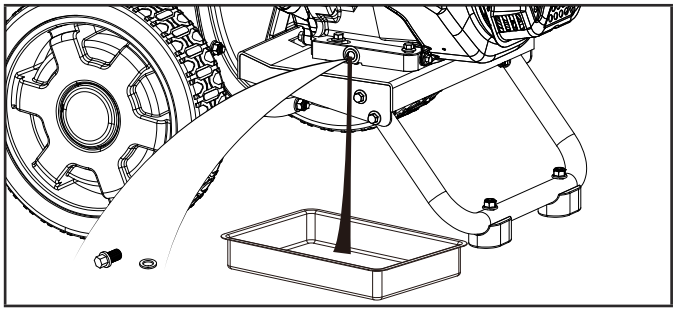

3. Replace the drain plug.
4. Remove oil fill cap/dipstick to add oil.
5. Add up to 37.2 fl. oz (1100 ml) of oil and replace oil fill cap/dipstick. DO NOT OVERFILL.
6. Dispose of used oil at an approved waste management facility.

NOTICE

Once oil has been added, a visual check should show oil about 1-2 threads from running out of the fill hole. If using the dipstick to check oil level, DO NOT screw in the dipstick while checking.

⚠ WARNING

Used oil is a hazardous waste product and must be disposed of properly. Do not discard with household waste. Check with your local authorities, service center, or dealer for safe disposal/recycling facilities.

Cleaning and Adjusting the Spark Plug(s)

1. Remove the spark plug cable from the spark plug.
2. Use a spark plug socket tool (not included), or a 13/16 in. (21 mm) socket (not included) to remove the plug.
3. Inspect the electrode on the plug. It must be clean and not worn to produce the spark required for ignition.
4. Make certain the spark plug gap is 0.028-0.031 in. (0.7-0.8 mm).

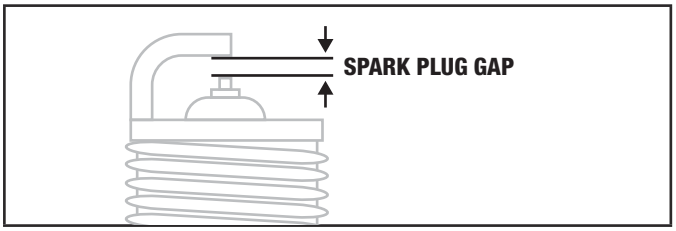

5. Refer to the spark plug types in *Specifications* when replacing the plug.
6. Firmly re-install the plug.
7. Attach the spark plug cable to the spark plug.

Clean the Air Filter

1. Remove the plastic outer casing.
2. Remove the foam element.
3. Wash in liquid detergent and water. Squeeze thoroughly dry in a clean cloth.
4. Saturate in clean engine oil.
5. Squeeze in a clean, absorbent cloth to remove all excess oil.
6. Place the filter in the assembly.
7. Reattach the air filter cover.

Chipper-Shredder Maintenance

Make certain that the chipper-shredder is kept clean and stored properly. Only operate the unit on a flat, level surface in a clean, dry operating environment. DO NOT expose the unit to extreme conditions, excessive dirt, moisture or corrosive vapors.

Inspect all engine air vents and cooling slots to ensure that they are clean and unobstructed.

Inspect all chutes and housing and make sure they are free of dirt, and debris.

Check and tighten all bolts and nuts. It is possible for connections to vibrate loose over time.

Cleaning the Chipper-shredder

⚠ CAUTION

DO NOT spray engine with water.

Water can contaminate the fuel system and can enter the engine through the cooling slots and damage the engine.

Keep exterior surfaces of the engine free from dirt and debris to maintain proper engine cooling and performance.

Use a soft bristle brush or an air compressor nozzle (25 PSI) to clear dirt and debris away from the engine surfaces.

To prevent rust and corrosion on metal parts and after cleaning, use a rust & corrosion inhibitor for preventative maintenance.

Inspect Chipping Blades

⚠ WARNING

To avoid serious injury, perform maintenance on the unit only when the engine is stopped. Always disconnect the spark plug wire and fasten it away from the plug before beginning the maintenance, to prevent accidental starting of the engine.

Service Interval: See *Maintenance Schedule* table

The chipping blades of this unit can be sharpened to provide a new cutting surface as required. When inspecting the knives be careful to avoid touching the sharpened edges. To inspect the chipping knives:

1. Disconnect the spark plug wire and secure it away from the spark plug.
2. Using a 15mm socket, remove the M10 lock nuts securing the chipper chute to the front of the chipper and remove the chipper chute to access the knives.
3. Using the recoil starter, slowly pull the starter rope to rotate the rotor into position so the blades can be seen.

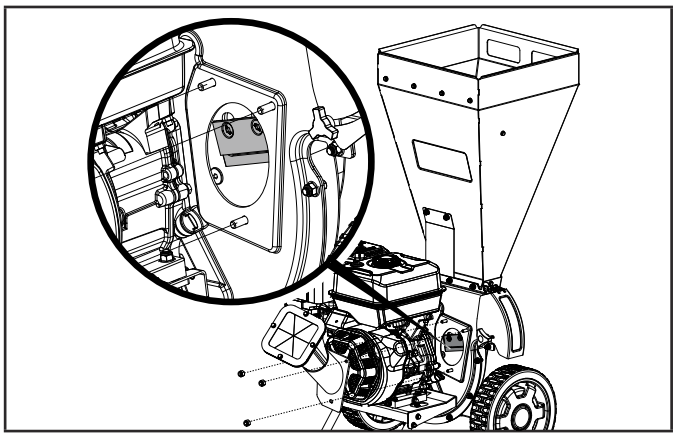

To sharpen or replace the chipper knives, see the *Repair* section.

Repair

Shredder Blade and Flail Blade Inspection and Replacement

⚠ WARNING

To avoid serious injury, perform maintenance on the unit only when the engine is stopped. Always disconnect the spark plug wire and fasten it away from the plug before beginning the maintenance, to prevent accidental starting of the engine.

The cutting edges of the shredding hammers may eventually wear out requiring replacement.

NOTICE

The hammer and blade assembly is precision balanced to ensure smooth operation. Any modification to this assembly could result in damage to the unit and will void the warranty.

To Access the Shredder Blades and Flail Blades:

1. Turn the engine off and wait for all moving parts to stop.
2. Disconnect the spark plug wire and secure it away from the spark plug.
3. Detach the outer flail housing and shredder hopper from the inner flail housing using a 12mm and 13mm socket and wrench to disassemble thirteen M8 lock nuts and M8 × 20 bolts that fasten the assemblies together. Carefully separate the parts.

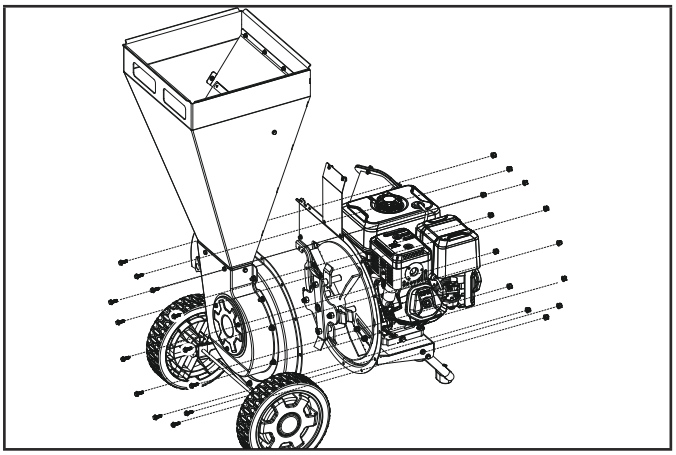

4. Note the assembly sequence of the hardware used to secure the shredder blades and flail blades. Using a 5/8 in. socket, remove the center bolt. Using a 16mm socket remove the four bolts to disassemble the shredder blade and flail blade assembly.

The hardware on this assembly was tightened and torqued during production and may require the use of an impact wrench to remove.

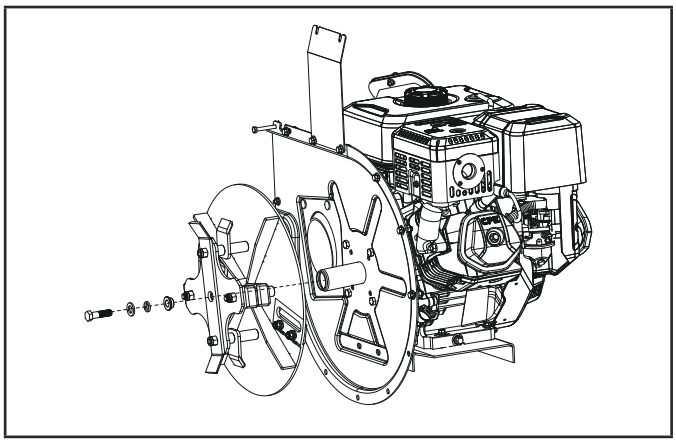

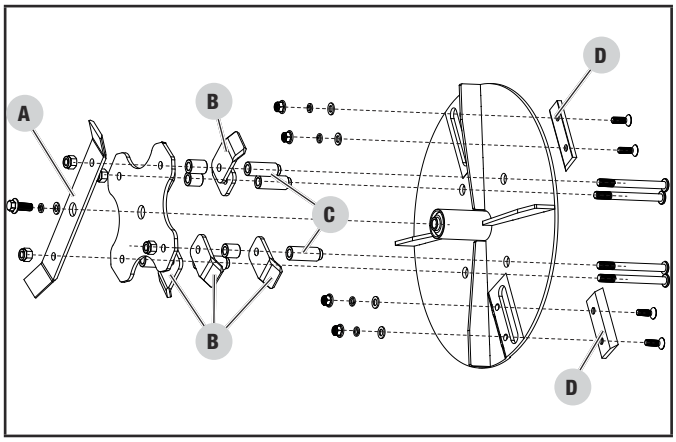

5. Inspect the shredder blade (A), flail blades (B), spacers (C), chipper blades (D) and hardware (nuts, bolts and washers). If any of the parts show signs of wear and/or damage, replace them.
6. Reassemble the hammers, blade, spacers, washers, nuts and bolts. Torque the nuts and bolts to 30-35 ft. lbs.

Chipping Blade Sharpening and Replacement

⚠ WARNING

To avoid injury, perform maintenance on the unit only when the engine is stopped. Always disconnect the spark plug wire and fasten it away from the plug before beginning maintenance to prevent accidental starting of the engine.

The chipping knives should be sharpened or replaced when tree limbs require extra force to feed into the chipper chute.

The chipping knives may be sharpened at a 30-degree angle until the distance between the edge of the blade bevel and the mounting hole is less than 1/16” (1.6mm).

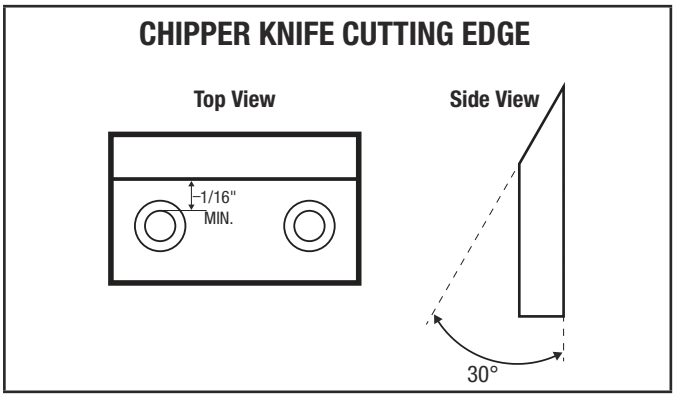

To inspect, sharpen, or replace the chipping knives:

1. Turn the engine off and wait for all moving parts to stop.
2. Disconnect the spark plug wire and secure it away from the spark plug.
3. Detach the outer flail housing and shredder hopper from the inner flail housing using two 12mm socket and wrench to disassemble thirteen M8 lock nuts and M8 × 20 bolts that fasten the assemblies together. Carefully separate the parts.

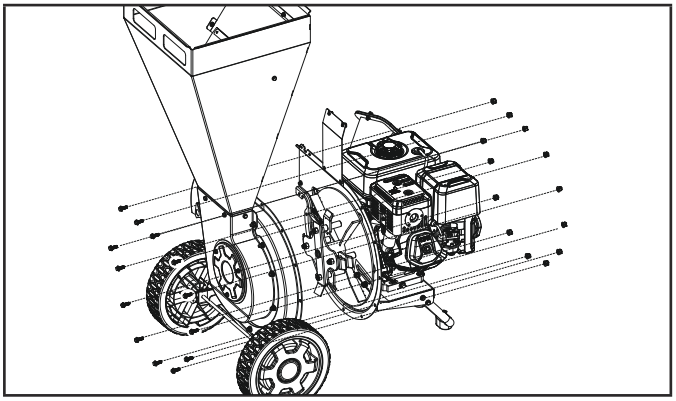

4. To remove the impeller assembly from the inner flail housing, use a 5/8 in. socket to remove the bolt in the center of the assembly (A). Pull the impeller assembly (B) outward and remove from the inner flail housing (C).

The hardware on this assembly was tightened and torqued during production and may require the use of an impact wrench to remove.

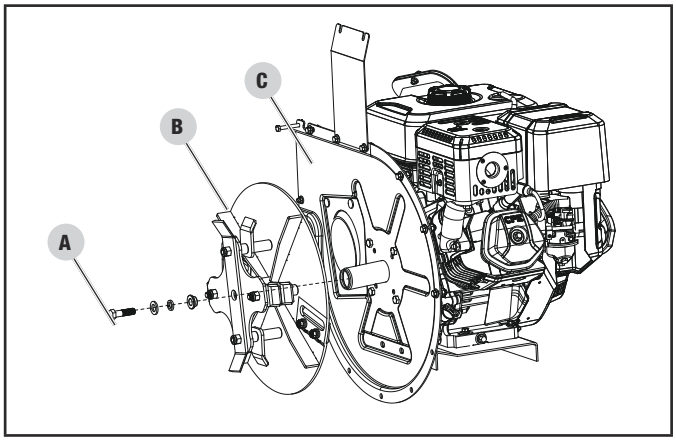

5. Using a 3/16 in. hex wrench and a 12mm wrench, loosen the four (two on each blade) M8 × 25 countersink hex head screws (A) and M8 lock nuts (B) and remove the chipper blades (C).

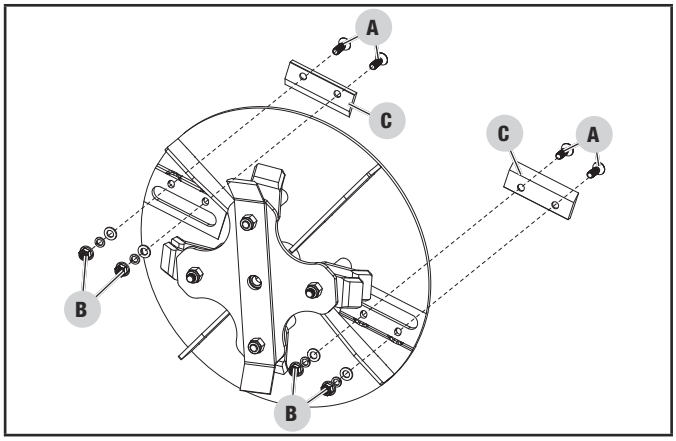

6. Inspect, sharpen, or replace the chipper blades.
7. Reinstall the chipper blades (C) and, using a 3/16 in. hex wrench and 12mm wrench, tighten the M8 × 25 countersink hex head screws (A) and M8 lock nuts (B) to 18-20 ft. lbs. of torque. We recommend the use of high strength thread lock on screws.

Maintenance Schedule

Follow the service intervals indicated in the following maintenance schedule.

Service your chipper-shredder more frequently when operating in adverse conditions.

Contact our Technical Support Team at 1-877-338-0999 to locate the nearest CPE certified service dealer for your chipper-shredder or engine maintenance needs.

EVERY 8 HOURS OR PRIOR TO EACH USE

- ☐ Check engine oil level
- ☐ Clean around air intake and muffler
- ☐ Check air filter
- ☐ Check for loose or damaged parts
- ☐ Inspect all chute guards

FIRST 5 HOURS

- ☐ Change oil (break in period)

EVERY 25 HOURS OR PER 1 MONTH

- ☐ Chang engine oil
- ☐ Clean air filter
- ☐ Inspect all blades, sharpen if needed

EVERY 50 HOURS OR PER 6 MONTHS

- ☐ Clean and adjust spark plug
- ☐ Check cooling fan

EVERY 100 HOURS OR PER 1 YEAR

- ☐ Check/adjust valve clearance*
- ☐ Clean fuel tank and filter*

EVERY 200 HOURS OR PER 2 YEARS

- ☐ Check/replace fuel line
- ☐ Change spark plug

EVERY 250 HOURS

- ☐ Clean combustion chamber

** To be performed by knowledgeable, experienced owners or CPE certified service centers.*

STORAGE

Refer to the *Maintenance* sections for proper cleaning instructions.

Always disconnect the spark plug wire in times of inactivity, maintenance, and storage. This will help to prevent any unintended engine start ups.

⚠ WARNING

Never store the chipper-shredder indoors next to appliances where there is a source of heat, open flame, spark or pilot light because they can ignite gasoline vapors.

DO NOT store a chipper-shredder near fertilizer or any corrosive material. Even with an empty gas tank, gasoline vapors could ignite.

Chipper-shredder Storage

1. The chipper-shredder needs to cool for at a minimum of 5 minutes before storing.
2. Clean the chipper-shredder before storage according to the *Maintenance* section.
3. Store the unit in a clean, dry place out of direct sunlight.

Engine Stored for Less than 30 Days

1. Add a properly formulated fuel stabilizer to the tank.
2. Run the engine for a minimum of 3 minutes with treated fuel to cycle through the fuel system and carburetor.
3. Turn the fuel valve to the “OFF” position.
4. Let the engine run until fuel starvation has stopped the engine.
5. Let the engine completely cool before cleaning and storage.
6. Clean the engine according to the *Maintenance* section.

Engines Stored for Over 30 Days

1. Add a properly formulated fuel stabilizer to the tank.
2. Run the engine for a minimum of 3 minutes with treated fuel to cycle through the fuel system and carburetor.
3. Turn the fuel valve to the “OFF” position.
4. Let the engine run until fuel starvation has stopped the engine.
5. Let the engine completely cool before cleaning and storage.
6. Clean the engine according to the *Maintenance* section.
7. Change the oil.
8. Remove the spark plug and pour about ½ ounce (14.8 mL) of oil into the cylinder. Crank the engine slowly to distribute the oil and lubricate the cylinder.

SPECIFICATIONS

Chipper-shredder Specifications

Max Diameter Chipper Material	3 in. (7.6 cm)
Max Diameter Shredder Material	1/2 in. (1.3 cm)

Overall Dimensions

Net Weight	174.6 lbs. (79.2 kg)
Height	49.9 in. (126.8 cm)
Width	26.6 in. (67.5 cm)
Length	27.7 in. (70.4 cm)

Engine Specifications

Model	R338P
Displacement	338 cc
Type	4-Stroke OHV
Start Type	Recoil

Fuel Specifications

Use regular unleaded gasoline with a minimum octane rating of 87 and an ethanol content of less than 10% by volume. DO NOT USE E15 or E85. DO NOT OVERFILL.

Gasoline Capacity	1.45 gal. (5.5 L)

Engine Oil Specifications

DO NOT OVERFILL.

Type	See chart below
Capacity	37.2 fl. oz (1100 ml)

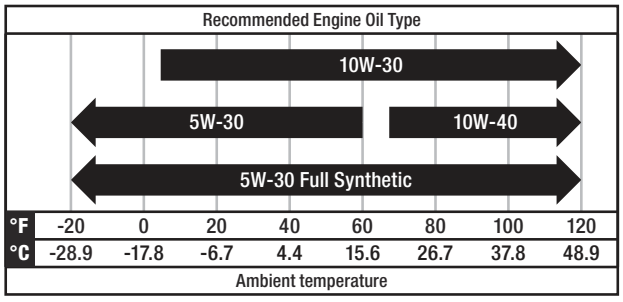

NOTICE

Weather will affect engine oil and engine performance. Change the type of engine oil used based on weather conditions to suit the engine needs.

Spark Plug Specifications

OEM Type	F6RTC
Replacement Type	NGK BPR6ES or equivalent
Gap	0.028-0.031 in. (0.7-0.8 mm)

Valve Specifications

Intake Clearance	0.002-0.0039 in. (0.05-0.1 mm)
Exhaust Clearance	0.002-0.0039 in. (0.05-0.1 mm)

NOTICE

A technical bulletin regarding valve adjustment procedures is available at www.championpowerequipment.com.

Important Message About Temperature

Your product is designed and rated for continuous operation at ambient temperatures up to 104°F (40°C). When your product is needed it may be operated at temperatures ranging from 5°F (-15°C) to 122°F (50°C) for short periods of time. If exposed to temperatures outside this range during storage, it should be brought back within this range before operation. In any event, the product must always be operated outdoors, in a well-ventilated area and away from doors, windows and vents.

TROUBLESHOOTING

Problem	Cause	Solution
Engine will not start.	No fuel.	Add fuel.
	Faulty spark plug.	Replace spark plug.
	Unit loaded during start up.	Remove load from unit.
Engine will not start; Engine starts but runs roughly.	Low oil level.	Fill crankcase to the proper level.
		Place chipper-shredder on a flat, level surface.
	Choke in the wrong position.	Adjust choke.
	Spark plug wire loose.	Attach wire to spark plug.
Engine shuts down during operation.	Out of fuel.	Fill fuel tank.
	Low oil level.	Fill crankcase to the proper level. Place chipper-shredder on a flat, level surface.
Engine cannot supply enough power or overheating.	Insufficient ventilation.	Check for air restriction. Move to a well ventilated area.
No materials are discharged	Flail housing clogged	Stop engine immediately, disconnect spark plug, take apart flail housing to clear clog
	Deflector chute clogged	Stop engine immediately, disconnect spark plug, take apart deflector chute to clear clog
	Collection bag is full	Stop engine, disconnect spark plug, empty collection bag
Discharge rate slows or discharge material changes	Chipper blades, shredder blade and flail blades are dull	Stop engine, disconnect spark plug, take apart flail housing and check all blades. Sharpen if needed
Excessive vibration or unusual noise while engine is running or material is being processed	Foreign object(s) in chutes or flail housing	Stop engine immediately, disconnect spark plug, inspect all chutes and take apart flail housing to inspect for foreign object (s)
	Impeller overloaded with material	Allow impeller to run current material load through before adding more
	Material is too dry or thick for blades	Remove material immediately

For further technical support:

Technical Support Team
Toll Free 1-877-338-0999
support@championpowerequipment.com

WARRANTY*

CHAMPION POWER EQUIPMENT

2 YEAR LIMITED WARRANTY

Warranty Qualifications

To register your product for warranty and FREE lifetime call center technical support please visit:

https://www.championpowerequipment.com/register

To complete registration you will need to include a copy of the purchase receipt as proof of original purchase. Proof of purchase is required for warranty service. Please register within ten (10) days from date of purchase.

Repair/Replacement Warranty

CPE warrants to the original purchaser that the mechanical and electrical components will be free of defects in material and workmanship for a period of two years (parts and labor) from the original date of purchase and 90 days (parts and labor) for commercial and industrial use. Transportation charges on product submitted for repair or replacement under this warranty are the sole responsibility of the purchaser. This warranty only applies to the original purchaser and is not transferable.

Do Not Return The Unit To The Place Of Purchase

Contact CPE's Technical Service and CPE will troubleshoot any issue via phone or e-mail. If the problem is not corrected by this method, CPE will, at its option, authorize evaluation, repair or replacement of the defective part or component at a CPE Service Center. CPE will provide you with a case number for warranty service. Please keep it for future reference. Repairs or replacements without prior authorization, or at an unauthorized repair facility, will not be covered by this warranty.

Warranty Exclusions

This warranty does not cover the following repairs and equipment:

Normal Wear

Products with mechanical and electrical components need periodic parts and service to perform well. This warranty does not cover repair when normal use has exhausted the life of a part or the equipment as a whole.

Installation, Use and Maintenance

This warranty will not apply to parts and/or labor if the product is deemed to have been misused, neglected, involved in an accident, abused, loaded beyond the product's limits, modified, installed improperly or connected incorrectly to any electrical component. Normal maintenance is not covered by this warranty and is not required to be performed at a facility or by a person authorized by CPE.

Other Exclusions

This warranty excludes:

- Cosmetic defects such as paint, decals, etc.
- Wear items such as filter elements, o-rings, etc.
- Failures due to acts of God and other force majeure events beyond the manufacturer's control.
- Problems caused by parts that are not original Champion Power Equipment parts.

When applicable, this warranty does not apply to products used for prime power in place of a utility.

Limits of Implied Warranty and Consequential Damage

Champion Power Equipment disclaims any obligation to cover any loss of time, use of this product, freight, or any incidental or consequential claim by anyone from using this product. THIS WARRANTY AND THE ATTACHED U.S. EPA and/or CARB EMISSION CONTROL SYSTEM WARRANTIES (WHEN APPLICABLE) ARE IN LIEU OF ALL OTHER WARRANTIES, EXPRESS OR IMPLIED, INCLUDING WARRANTIES OF MERCHANTABILITY OR FITNESS FOR A PARTICULAR PURPOSE.

A unit provided as an exchange will be subject to the warranty of the original unit. The length of the warranty governing the exchanged unit will remain calculated by reference to the purchase date of the original unit.

This warranty gives you certain legal rights which may change from state to state or province to province. Your state or province may also have other rights you may be entitled to that are not listed within this warranty.

Contact Information

Address

Champion Power Equipment, Inc.
6370 S Pioneer Way, Unit 101
Las Vegas, NV 89113 USA
www.championpowerequipment.com

Customer Service

Toll Free: 1-877-338-0999
info@championpowerequipment.com
Fax no.: 1-562-236-9429

Technical Service

Toll Free: 1-877-338-0999
tech@championpowerequipment.com
❗ EMERGENCY 24 HOUR SUPPORT: 1-562-204-1188

*Except as otherwise stipulated in any of the following enclosed Emission Control System Warranties (when applicable) for the Emission Control System: U.S. Environment Protection Agency (EPA) and/or California Air Resources Board (CARB).

CHAMPION POWER EQUIPMENT, INC. (CPE)
AND THE UNITED STATES ENVIRONMENTAL PROTECTION AGENCY (U.S. EPA)
EMISSION CONTROL SYSTEM WARRANTY

Your Champion Power Equipment (CPE) engine complies with U.S. EPA emissions regulations.

YOUR WARRANTY RIGHTS AND OBLIGATIONS:

The US EPA and CPE are pleased to explain the Federal Emission Control Systems Warranty on your 2026 small off-road engine and engine powered equipment. New engines and equipment must be designed, built and equipped, at the time of sale, to meet U.S. EPA regulations for small off-road engines. CPE warrants the emission control system on your small off-road engine and equipment for the period of time listed below, provided there has been no abuse, neglect, unapproved modification, or improper maintenance of your equipment.

Your emission control system may include parts such as the carburetor, fuel-injection system, the ignition system, catalytic converter and fuel lines. Also included may be hoses, belts, connectors and other emission related assemblies. Where a warrantable condition exits, CPE will repair your small off-road engine at no cost to you including diagnosis, parts and labor.

MANUFACTURER'S EMISSION CONTROL SYSTEM WARRANTY COVERAGE:

This emission control system is warranted for two years, subject to provisions set forth below. If, during the warranty period, an emission related part on your engine is defective in materials or workmanship, the part will be repaired or replaced by CPE.

OWNER'S WARRANTY RESPONSIBILITIES:

As the small off-road engine owner, you are responsible for the performance of the required maintenance listed in your Owner's Manual. CPE recommends that you retain all your receipts covering maintenance on your small off-road engine, but CPE cannot deny warranty solely for the lack of receipts or for your failure to ensure the performance of all scheduled maintenance.

As the small off-road engine owner, you should however be aware that CPE may deny you warranty coverage if your small, off-road engine or a part has failed due to abuse, neglect, improper maintenance or unapproved modifications.

You are responsible for presenting your small off-road engine to an Authorized CPE service outlet or alternate service outlet as described in (3)(f.) below, CPE dealer or CPE, Las Vegas, NV. as soon as a problem exists. The warranty repairs should be completed in a reasonable amount of time, not to exceed 30 days.

If you have any questions regarding your warranty rights and responsibilities, you should contact:

Champion Power Equipment, Inc.
Customer Service
6370 S Pioneer Way, Unit 101
Las Vegas, NV 89113
1-877-338-0999
tech@championpowerequipment.com

EMISSION CONTROL SYSTEM WARRANTY

The following are specific provisions relative to your Emission Control System (ECS) Warranty Coverage.

1. **APPLICABILITY:** This warranty shall apply to 1997 and later model year small off-road engines. The ECS Warranty Period shall begin on the date the new engine or equipment is delivered to its original, end-use purchaser, and shall continue for 24 consecutive months thereafter.

2. **GENERAL EMISSIONS WARRANTY COVERAGE**
   CPE warrants to the original, end-use purchaser of the new engine or equipment and to each subsequent purchaser that the ECS when installed is:

   2a. Designed, built and equipped so as to conform to U.S. EPA emissions standards for spark-ignited engines at or below 19 kilowatts.

   2b. Free from defects in materials and workmanship that cause the failure of a warranted part to be identical in all material respects to the part as described in the engine manufacturer's application for certification for a period of two years.

3. **THE WARRANTY ON EMISSION-RELATED PARTS WILL BE INTERPRETED AS FOLLOWS:**

   3a. Any warranted part that is not scheduled for replacement as required maintenance in the Operator's Manual shall be warranted for the ECS Warranty Period. If any such part fails during the ECS Warranty Period, it shall be repaired or replaced by CPE according to Subsection "d" below. Any such part repaired or replaced under the ECS Warranty shall be warranted for any remainder of the ECS Warranty Period.

   3b. Any warranted, emissions-related part which is scheduled only for regular inspection as specified in the Operator's Manual shall be warranted for the ECS Warranty Period. A statement in such written instructions to the effect of "repair or replace as necessary", shall not reduce the ECS Warranty Period. Any such part repaired or replaced under the ECS Warranty shall be warranted for the remainder of the ECS Warranty Period.

   3c. Any warranted, emissions-related part which is scheduled for replacement as required maintenance in the Operator's Manual shall be warranted for the period of time prior to the first scheduled replacement point for that part. If the part fails prior to the first scheduled replacement, the part shall be repaired or replaced by CPE according to Subsection "d" below. Any such emissions-related part repaired or replaced under the ECS Warranty, shall be warranted for the remainder of the ECS Warranty Period prior to the first scheduled replacement point for such emissions-related part.

   3d. Repair or replacement of any warranted, emissions-related part under this ECS Warranty shall be performed at no charge to the owner at a CPE Authorized Service Outlet.

   3e. The owner shall not be charged for diagnostic labor which leads to the determination that a part covered by the ECS Warranty is in fact defective, provided that such diagnostic work is performed at a CPE Authorized Service Outlet.

   3f. CPE shall pay for covered emissions warranty repairs at non-authorized service outlets under the following circumstances:

      i. The service is required in a population center with a population over 100,000 according to U.S. Census 2000 without a CPE Authorized Service Outlet AND

      ii. The service is required more than 100 miles from a CPE Authorized Service Outlet. The 100 mile limitation does not apply in the following states: Alaska, Arizona, Colorado, Hawaii, Idaho, Montana, Nebraska, Nevada, New Mexico, Oregon, Texas, Utah and Wyoming.

   3g. CPE shall be liable for damages to other original engine components or approved modifications proximately caused by a failure under warranty of an emission-related part covered by the ECS Warranty.

   3h. Throughout the ECS Warranty Period, CPE shall maintain a supply of warranted emission-related parts sufficient to meet the expected demand for such emission-related parts.

   3i. Any CPE Authorized and approved emission-related replacement part may be used in the performance of any ECS Warranty maintenance or repair and will be provided without charge to the owner. Such use shall not reduce CPE's warranty obligation.

   3j. Unapproved add-on or modified parts may not be used to modify or repair a CPE engine. Such use voids this ECS Warranty and shall be sufficient grounds for disallowing an ECS Warranty claim. CPE shall not be liable hereunder for failures of any warranted parts of a CPE engine caused by the use of such an unapproved add-on or modified part.

EMISSION-RELATED PARTS INCLUDE THE FOLLOWING: (using those portions of the list applicable to the engine)

Systems covered by this warranty	Parts Description
Fuel Metering System	Fuel regulator, Carburetor and internal parts
Air Induction System	Air cleaner, Intake manifold
Ignition System	Spark plug and parts, Magneto ignition system
Exhaust System	Exhaust manifold, catalytic converter
Miscellaneous Parts	Tubing, Fittings, Seals, Gaskets, and Clamps associated with these listed systems.
Evaporative Emissions	Fuel Tank, Fuel Cap, Fuel Lines (for liquid fuel and fuel vapors), Fuel Line Fittings, Clamps, Pressure Relief Valves, Control Valves, Control Solenoids, Electronic Controls, Vacuum Control Diaphragms, Control Cables, Control Linkages, Purge Valves, Gaskets, Liquid/Vapor Separator, Carbon Canister, Canister Mounting Brackets, Carburetor Purge Port Connector

TO OBTAIN WARRANTY SERVICE:

You must take your CPE engine or the product on which it is installed, along with your warranty registration card or other proof of original purchase date, at your expense, to any Champion Power Equipment dealer who is authorized by Champion Power Equipment, Inc. to sell and service that CPE product during his normal business hours. Alternate service locations defined in Section (3)(f.) above must be approved by CPE prior to service. Claims for repair or adjustment found to be caused solely by defects in material or workmanship will not be denied because the engine was not properly maintained and used.

If you have any questions regarding your warranty rights and responsibilities, or to obtain warranty service, please write or call Customer Service at Champion Power Equipment, Inc.

Champion Power Equipment, Inc.
6370 S Pioneer Way, Unit 101
Las Vegas, NV 89113
1-877-338-0999
Attn.: Customer Service
tech@championpowerequipment.com